Series **Transverse**

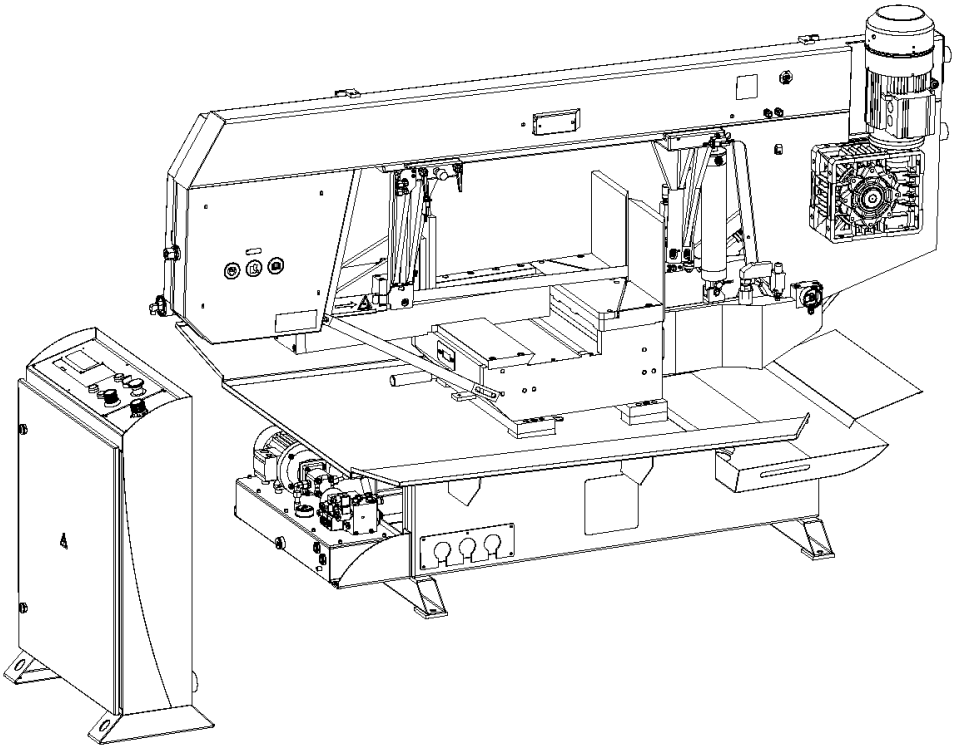

Transverse 610.440 DGH

Operating instructions

Before transporting and using the machine, please read the instructions thoroughly!

Seriové číslo / Serien Nummer / Serial Number _____

Service and information

EC Declaration of Conformity

1) We:

BOMAR, spol. s r.o.
Těžební 1236/1
627 00 Brno, Czech Republic
Id. No: 48908827
declare herewith

that the following designated device based on its conception and construction as well as the design launched by us meets the relevant basic safety requirements of the decrees of the government.This statement applies exclusively to the machine device in conditions in which it was brought to the market. It does not apply to parts subsequently added by the end user or to modifications performed subsequently by the end user. In the event of any device modification not approved by us this declaration shall lose its validity

Name:	**Band Saw**
Type :	**Transverse 610.440 DGH**
Serial number:	
Manufacturer	**BOMAR, spol. s r.o., Těžební 1236/1, 627 00 Brno**
Product data	
Determination:	for cross dividing and cutting of rolled and towed bars and profiles made of steel, stainless steel, non-ferrous metals and plastics
Description:	Stand, table, cutting unit with the arm, saw band and drive, hand clamping device, cooling system, machine control

Pneumatic *NO* ☒ *YES* ☐ Hydraulic *NO* ☐ *YES* ☒ Control system *NO* ☐ *YES* ☒

Technical data:	Řezná rychlost	20-90 m.min-1
	Řezný úhel	-60° až 60°
	Celkové rozměry v mm (dxšxv)	2700x1550x1500
	Celkový příkon	5,2 kW
	Hmotnost	1000 kg

Documentation:
Technical documentation for this machine device was elaborated in compliance with Government regulation no. 176/2008, Annex 7, part A.

The device meets relevant requirements of the given directives: **2006/42/ES**
2004/108/ES

The applied harmonized standards, National standards and technical specifications:

ČSN EN ISO 12100:2011	ČSN EN 13898+A1:2009	ČSN EN ISO 13857:2008
ČSN EN ISO 4413:2011		ČSN EN 60204 -1 ed.2+A1:2009
ČSN EN 55011 ed.3+A1:2011	ČSN EN 61000-6-2 ed.3:2006	ČSN EN 61000-6-4 ed.2+A1:2011

The product is safe on condition of the common and determined usage.

The conformity judging was performed according to §12, par. 3, let. a), of the Law no. 22/1997 Coll. as amended.
The declaration of conformity was carried out in the cooperation with the TÜV SÜD Czech s.r.o, 2) , Novodvorská 994, 142 21 Prague 4 – Czech Republic, Identification number: 63987121 - Inspection body no. 4002.

The inspection certificate no **07.489.661** was issued

BOMAR, spol. s r.o.
Těžební 1236/1, 627 00 Brno
Czech Republic
IČO: 48908827
DIČ: CZ48908827

Brno, 17.12.2015
Point of issue, datum

Alfred Pichlmann, Managing Director
Name and function of the responsible subject, signature

Person authorized to complete the technical documentation:: BOMAR, spol. s r. o., Těžební 1236/1, 627 00 Brno

1) Name, address and identification number of the subject issuing the conformity declaration (producer of importer)
2) The authorized or accredited body co-operating on the conformity judging

!	If the equipment is installed without safety equipment offered by BOMAR, spol. s ro or its agents and used by the customer (or buyer) then EC declaration loses validity. EC Declaration of conformity is valid only if customer (buyer) installed the BOMAR safety equipment with the machine or with some other with equivalent safety device in accordance with current applicable regulations and standards. All machine elements and components that were built into the device by BOMAR, spol. s ro have been declared "identical" to a safety device, as offered by BOMAR, spol. s ro or its agents.

Content

1. Safety notes

The operating instructions must be read by the person, who keeps in touch with the machine before transportation, installation, using, servicing, reparation, stocking or removal!

The operating instructions include relevant information. The operator must familiarise himself with the install and operation, safety notes and machine servicing, because reliability and service life must be reached. The operating instructions must avoid risks, which are linked to work on the machine. Before transporting and using of the machine, please read the instructions thoroughly!

Attention!
The operating instructions must be available at the machine! Keep the operating instructions in good condition!

1.1. Machine determination

The band saw **Transverse 610.440 DGH** is determined for cutting and shortening of rolled bars and drawn bars and profiles from steels, stainless steels, non-ferrous metals and plastics **with cutting angle** from -60° to 60°.

Combustible materials are excepted for cutting! Any other usage and operation outside this range are unauthorized and the manufacturer/supplier does not accept any responsibility for any damages resulting from such misuse. **The operator has full responsibility!**

The machine is equipped with safety and protective guarding for operator and machine protection. Nevertheless, this safety and protective guarding cannot prevent injury. Service personnel must read this chapter and comprehend it, before he starts to work on the machine. **Always keep instructions about work safety!** Service personnel must take into account other aspects of the risk, which refer to the ambient conditions and the material.

Attention!
Consider the safety signs on the machine. Do not remove or damage them!

1.2. Protective suit and personal safety

Wear tight fitting overalls! Loose fitting clothes may be caught with machine parts and cause serious injury.

Wear protective gloves! Material cuts and saw band have sharp edges and may cause serious injuries.

Attention!
Gloves you can use only at working material replacement (saw band)! The machine and accessories must be inactive! If the machine is running, you must not wear gloves! It is dangerous, because some parts of the machine can catch gloves!

Wear protective shoes with non-skid soles! The unsuitable shoes may cause balance loss and following injury. Falling work pieces may cause serious injuries too.

Wear protective goggles! Chips and cooling liquid may damage your eyes.

Always wear ear protections! Most of the machines emit up to 80 dB and may damage your hearing.

Do not wear jewellery and always tie back long hair! Moving machine parts can catch jewellery or loose hair and may cause serious injuries.

Operate the machine only when you are fit enough to work. Illnesses or injuries diminish concentration. Avoid machine work, which may compromise the safety of you and your colleagues!

1.3. Safety notes for machine operator

Attention!
Machine can be operated by person older than 18 years! Machine can be operated only person physically and mentally fit for this activity

Keep instructions and orders about work safety!
Read the operating instructions, before you start to work on the machine! Keep the operating instructions in good condition!

Machine can be operated only by one person. Machine operator is responsible for presence of other persons by the machine.

Close covers before the machine starting and check, if the covers are not damaged. Damaged covers must be repaired or changed. Do not start the machine, if the cover is removed! Check, if the electric cables are not damaged.

- Do not hold the material for clamping to the vice and for cutting!
- Do not operate with the buttons and the switches on the control panel, when you have gloves!

Attention!
Do not connect the machine to electricity if the covers are removed. Do not touch the electrical equipment.

- For machine starting take care, that there is nobody in the working area of the machine (it means in the working area of the vice, the saw band, the saw arm etc.).
- In no circumstances touch the rotating elements.
- Work on the machine only when the machine is in good condition!
- Check at least once in a shift, if the machine is not damaged. If the machine is damaged, you must bring the machine in order and you must inform your superior!
- Keep your working area clean! Ensure sufficient lighting in the working area.
- Take off the spilt water or the oil from the floor and dry it. Do not touch the cooling liquid with bare hands! Do not set the nozzle of the cooling liquid, when the machine is started on
- Do not remove the chips from the working area of the machine, when the machine is started on!
- Do not use the compressed air for the machine cleaning or for the chips removing!
- Use the protective instruments for chips removal!

1.4. Safety notes for the servicing and repairs

Attention!
Only a qualified professional can carry out the servicing and repairs of the electric equipment! Take special care during the work with electrical equipment. High voltage shock can have fatal consequences! Always keep notes about work safety! Otherwise, there is possibility of heavy injury!

Switch off the main switch and lock it, before you start service work! Otherwise, there is possibility of hazardous machine starting.

Only qualified person can do the servicing and repairs. For parts changing, use only parts, which are identical with the originals. Otherwise, there is possibility of health hazard. Use only recommended type of the hydraulic oils and oils and lubricants!

Do not remove or do not lock the limit switches or safety equipments! Any use of the saw, accessories or machine parts other than that intended by the BOMAR, spol. s r.o. company is not permitted. The guarantee on this product will be afterward lost and BOMAR, spol. s r.o. takes no responsibility for caused damages.

1.5. Safety notes for the servicing and repairs on hydraulic unit

Compliance with the the principles of cleanliness is basic requirement for trouble-free operation of hydraulic equipment. Hydraulic components are products made with high accuracy, and any contamination leads to a reduction lifetime or even malfunction. The consequences are very difficult to remove and expensive.

Always use clean tools. Parts and fasteners, which are part of a hydraulic circuit, never put away the dirty surface. The best cleaning agent is crepe paper, because the fibers of the cleaning cloths can also cause malfunction.

Protective cap from the threaded chamber remove just before the assembly of the unit.

Hoses and pipes before mounting flush with gasoline or other cleaning agent and blow compressed air.

All fittings must be properly tightened. However, do not raw power.

1.6. Safety machine accessories

The machine is equipped with safety accessories. It protects the operator from injuries and the machine before damage. The safety accessories are blocking accessories, emergency switches and covers. Check once in a week the function of the safety accessories. If the safety accessories are functionless, you must stop work and repair or change the safety accessories.

Enhanced risk!
Do not come into or intervene in the cutting area.
Otherwise, there is possibility of heavy injury.

1.6.1. Total Stop

TOTAL STOP button is used for emergency switching – off the machine in case defect or health hazard. By pressing **TOTAL STOP** button is interrupted the supply of the electrical power.

If any damages or fault appears, immediately press TOTAL STOP button! Release the pressing button is possible by twisting of the upper part of the button.

1.6.2. Saw arm cover

If the cover is opened during operation, the limit switch is opened and the band saw is stopped. The band saw is not possible to start in set mode.

The band saw is stated to the operation, when the cover is closed!

1.6.3. Saw band stretching and rupture inspection

This device checks the saw band stretching and causes immediate machine shut – down in the event the band ruptures.

The device contains limit switch. Check the stretching carefully and periodically – eventually adjust.

1.6.4. Saw band cover

It covers the visible area of the saw band from left guiding cube to the frame.

Never switch on the saw band driver if this cover is not mounted!

Attention!

- ***When handling cooling agents always wear hazardous fluid-proof gloves!***
- ***Wear protective goggles!***
- ***Cooling liquid can get in contact with your eyes and may cause permanent severe injuries***

1.7. Safety notes for the cooling

1.7.1. Instructions for first help

1. Pull off and safely remove polluted, soaked clothing.
2. For breathing, go out in the fresh air or look for first aid treatment.
3. Wash with water or use crèmes for contact with the skin.
4. Flush with water for eyes and look for first aid treatment.
5. For swallowing, drink a lot of water and induce vomiting. Look for medical help.

1.8. Umístění štítku stroje / Maschinenschild position / Position of machine label

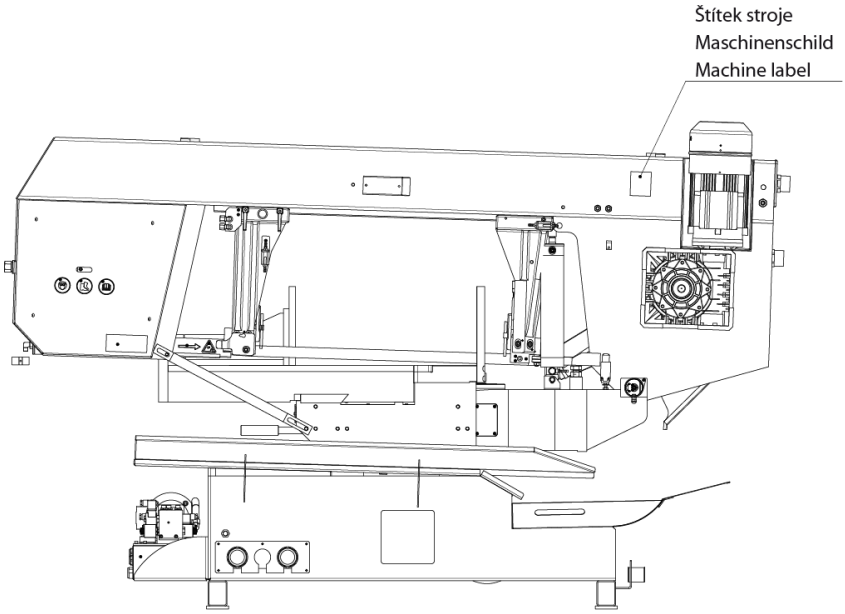

Machine label is placed on the saw arm near the electromotor.

1.9. Umístění bezpečnostních značek / Verteilung der Sicherheitszeichen / Position of safety symbols

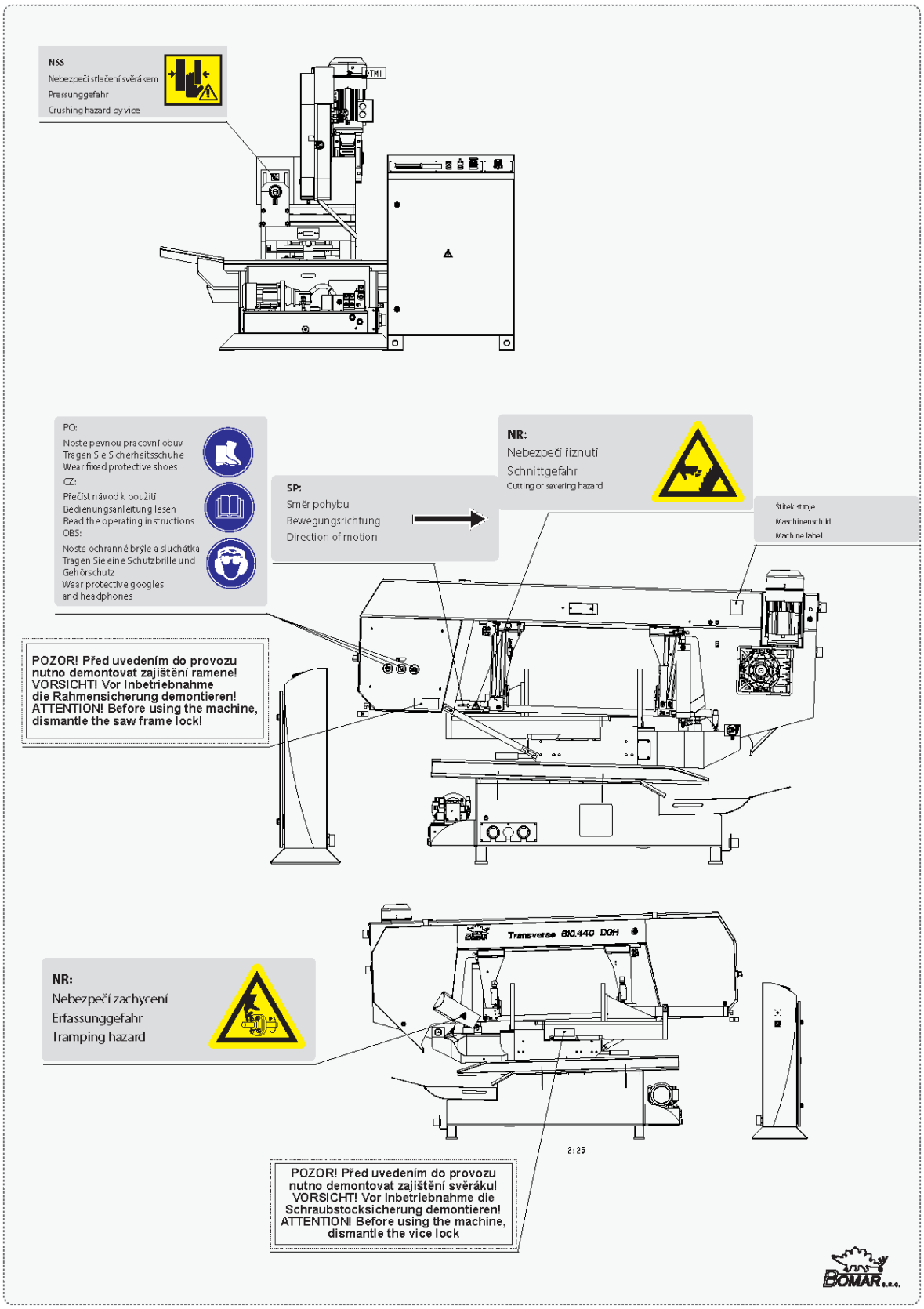

2. Machine documentation

2.1. Technická data / Technische Daten / Technical data

Hmotnost stroje / Maschinengewicht / Machine weight:	
• Hmotnost / Gewicht / Weight	1000 kg
Rozměry stroje / Maschinengröße / Machine size :	
• Délka / Länge / Lenght	2700 mm
• Šířka / Breite / Width	1550 mm
• Výška / Höhe / Height	1500 mm
Elektrické vybavení / Elektrische Ausrüstung / Electical equipment:	
• Napájení / Versorgungsspannun / Supply voltage	~3 x 400 V (230 V), 50Hz, TN-C-S/TN-C
• Příkon / Gesamptschlusswert / Total Input	5,2 kW
• Max.jištění / Max. Vorschaltsicherung / Max. Fuse	16 A
• Krytí / Schutzart / Protection	IP 54
Akustický tlak / Schalldruckpegel / Acoustic pressure:	
• Transverse 610.440 DGH	L_{Aeqv}=73 dB
Pohon / Atrieb / Drive:	
• Typ / Typ / Type	MDERAXX-100-32J
• Napájení / Versorgungsspannun / Supply voltage	~3 x 400V, 50Hz
• Výkon / Leistung / Output	3 kW
• Jmenovité otáčky / Motornenndrehzahl / Nominal speed	1420 min^{-1}
Hydraulické zařízení / Hydraulikeinrichtung / Hydraulic equipment:	
• Typ / Typ / Type	PPM-AC0,37-P61/2,5-TM16-CB03-FR
• Výkon / Leistung / Output	0,25 kW/4 MPa
• Jmenovité otáčky / Motornenndrehzahl / Nominal speed	1350 min^{-1}
Chladící zařízení / Kühlmiteleinrichtung / Cooling equipment:	
• Typ / Typ / Type	2COP1-12HP1-4
• Výkon / Leistung / Output	0,06 kW
• Obsah nádrže / Volumen vom Kühlmittel / Capacity	25 l
Rozměr pásu / Sägebanddimension / Band size:	
5200×34 (32)×1,1 mm	
Řezná rychlost / Schnittgeschwindigkeit / Cutting speed:	
20–90 m/min.	

Řezné rozsahy / Schnittbereiche / Cutting size:

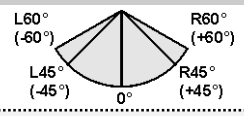

0°	Ø440 mm	610×440 mm	610×440 mm	440×440 mm
45° R	Ø440 mm	500×190 mm	360×440 mm	420×420 mm
45° L	Ø440 mm	510×180 mm	460×390 mm	390×390 mm
60° R	Ø330 mm	330×170 mm	170×440 mm	300×300 mm
60° L	Ø350 mm	350×170 mm	330×310 mm	310×310 mm

Level of acoustic pressure:

Equivalent level of acoustic pressure A (noise) at operator position are L_{Aeqv}=73 dB. Mentioned values are levels of emission which doesn't have to represent safe levels. Factors which influence real level of acoustic pressure on machine operator are: working place characteristics, cut material, saw band. These factors have significantly influence on acoustic pressure.

2.2. Rozměrové schéma / Aufstellzeichnung / Installation diagram

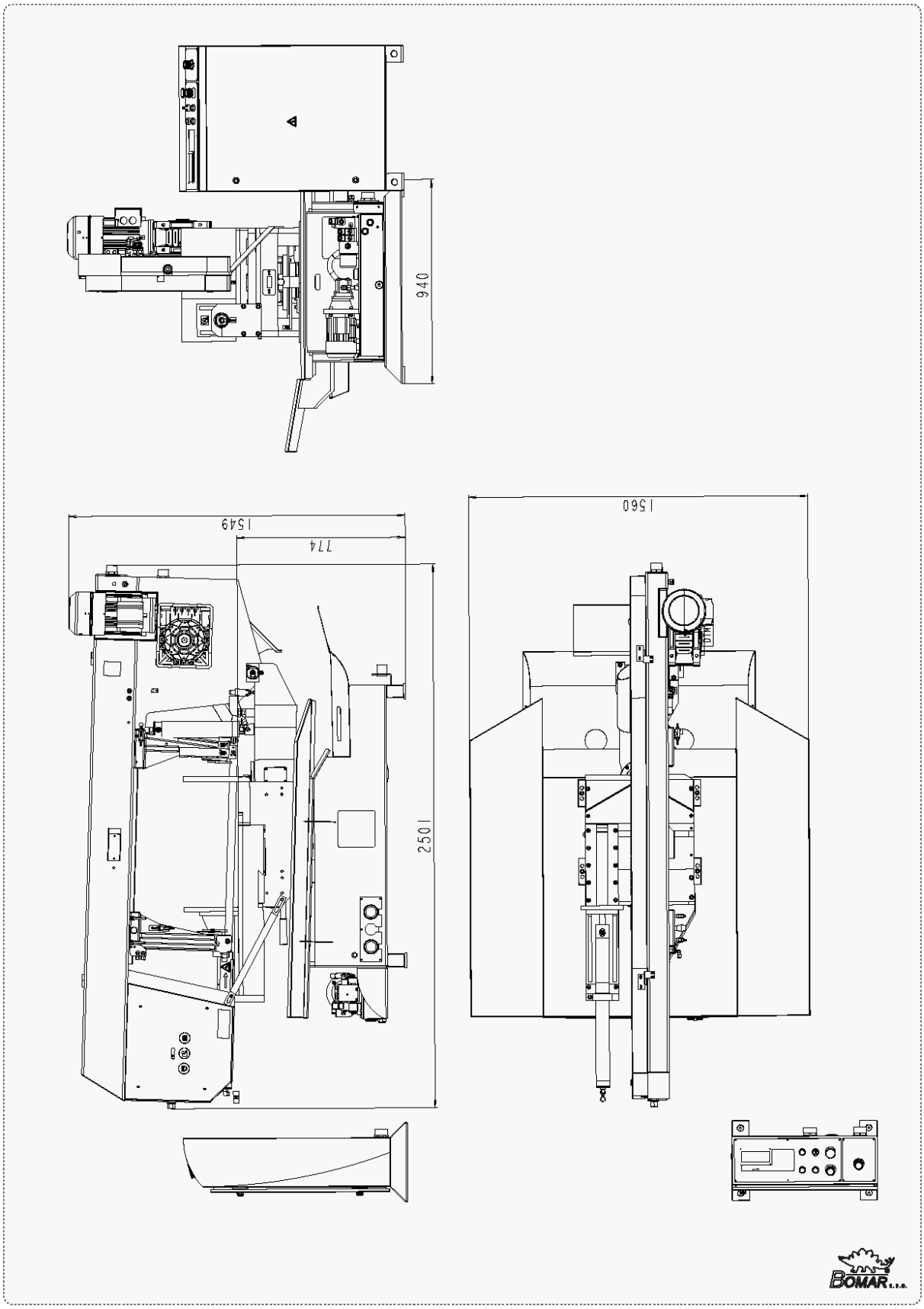

2.3. Popis / Beschreibung / Description

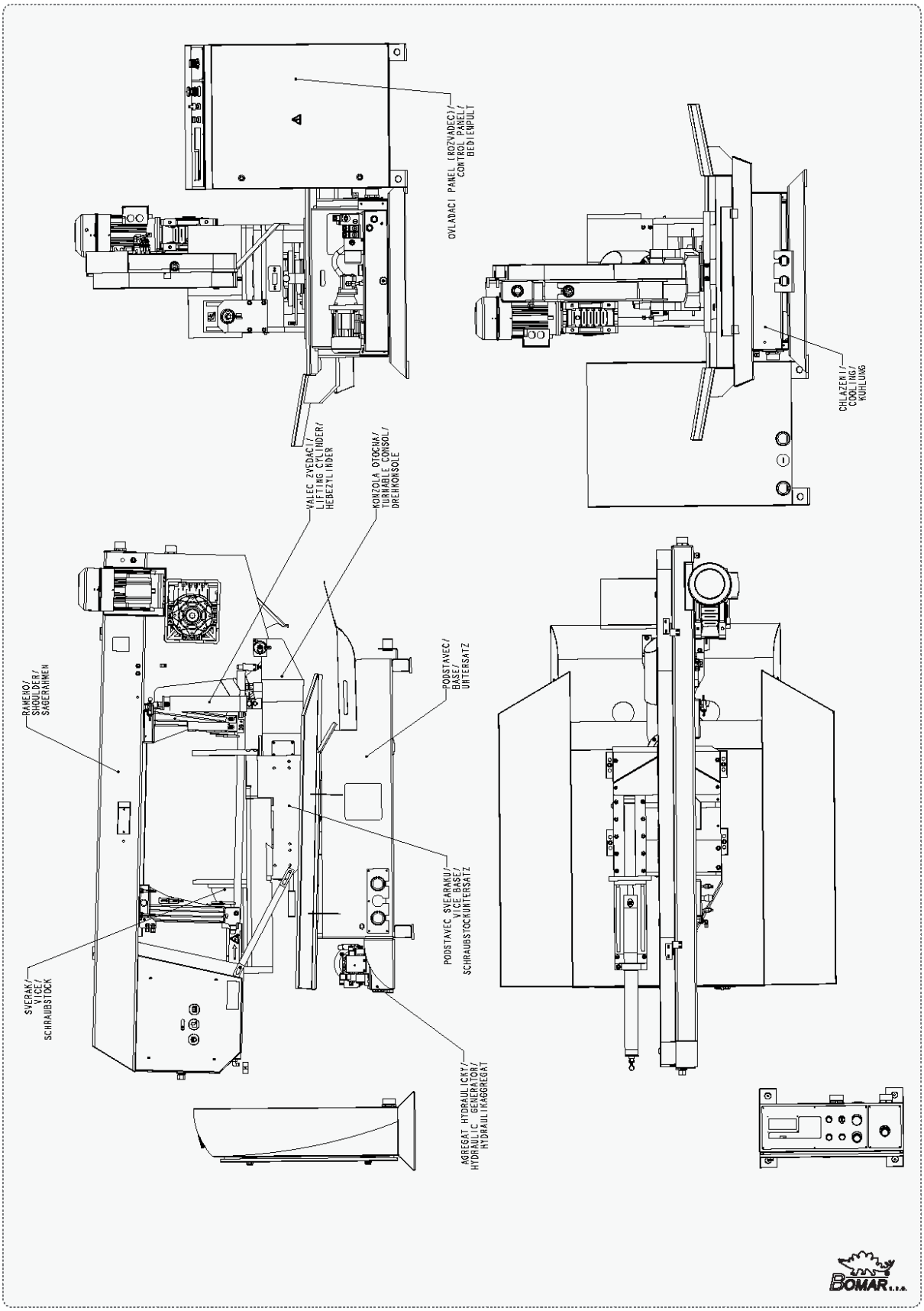

2.4. Transportation and stocking

2.4.1. Conditions for transportation and stocking

Keep recommendations for the manufacturers for transportation and stocking! If the recommendations are not kept, damage can occur to the machine.

- Don't use a forklift truck for handling the machine, if you do not have license for it!
- Don't move under suspended loads! Fault in lifting device may cause serious injury.
- Keep a safe distance from the machine during the transport.
- Temperature of the air from *-25°C to 55°C*, for a *short term* (max. 24 hours) temperature of the air until *70°C*
- Do not expose the machine to radiation (for example microwave radiation, ultraviolet radiation, laser radiation, x-ray radiation). Radiation can cause problems with the machine function and deteriorating condition of the isolation.
- Take measures, to prevent damage by dampness, by vibrations and by shakes.

2.4.2. Transport and stocking preparations

Close the vice and thoroughly oil all blank surfaces.

Lower the saw frame to the lowest position.

Make sure to empty the machine of all traces of the cooling agent.

Fasten all loose parts securely to the machine.

Pack and wrap the control desk securely to avoid damage during transport.

Fix the stickers stating the minimum approximate machine weight to at least five well visible places.

2.4.3. Transport and stocking

The machine must be secured during transportation. Screw on the palette to the floor of the van or the trailer. Be careful that the machine is not damaged during transportation. Store the machine only under conditions mentioned in the manual, to avoid damage of the machine.

It is forbidden to handle the machine any other way, than it is written in this operating instructions, the machine can be damaged.

2.4.4. Transportní schéma / Transport schema /

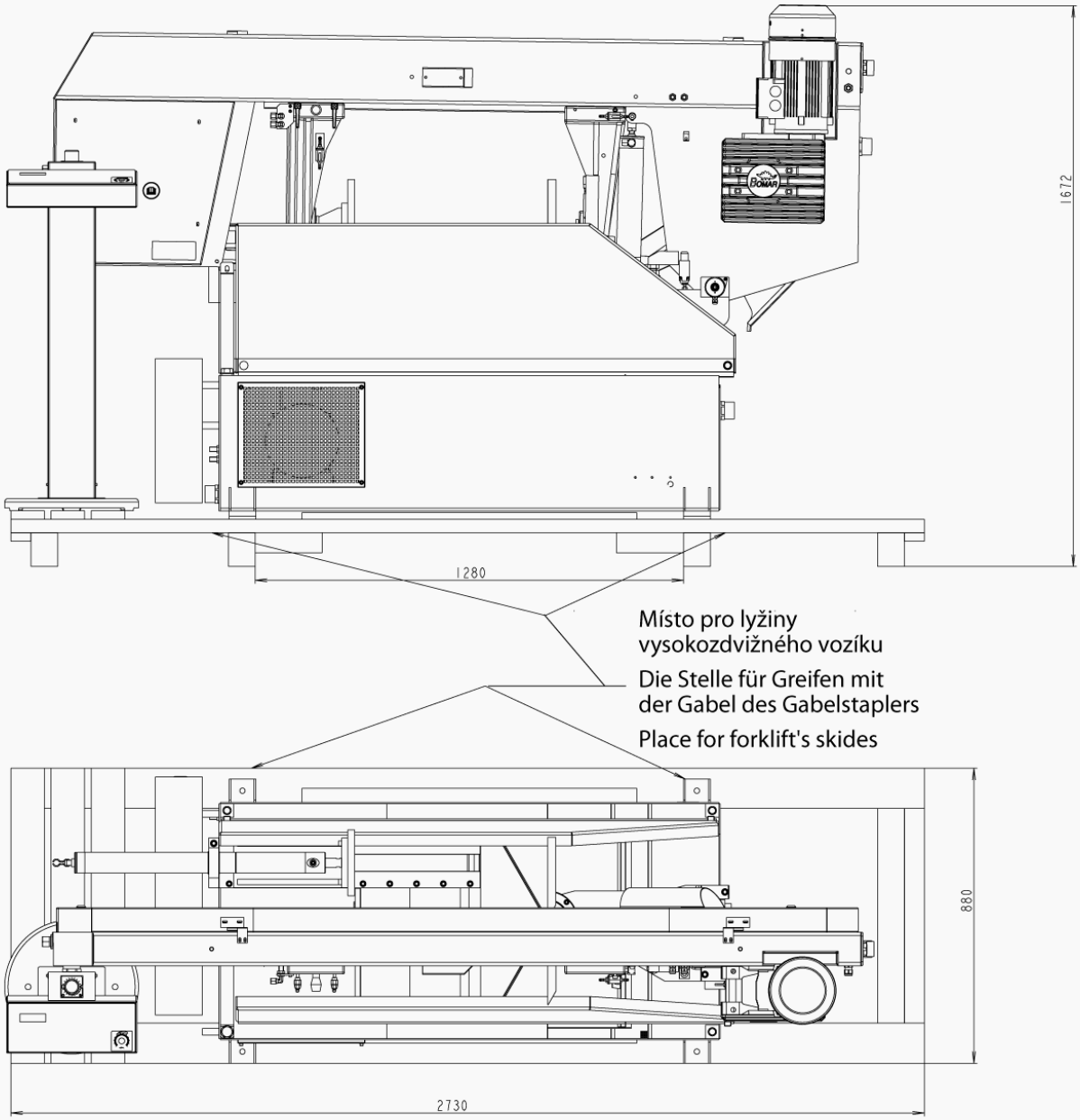

Transport scheme

2.5. Activation

2.5.1. Machine working conditions

Keep the conditions of the manufacturer for machine operating! If recommendations are not kept, damage can occur to the machine.

The manufacturer warrants the correct function of the machine for these conditions:

- At temperature air from ***10°C to 40°C***, the temperature average during 24 hours must ***not exceed over 35°C***.
- At relative dampness of the air in the extend from 30% to 95% (not concentrate)
- Altitude lower than 1000 metres.
- Do not expose the machine to the radiation (for example microwave radiation, ultra-violet radiation, laser radiation, x-ray radiation). Radiation can cause problems with the machine function and deteriorating condition of the isolation.

Attention!
If the ambient temperature drops below 15 ˚ C is required before operating the machine to have switch on hydraulic unit around 10 minutes and then made several motion few times (for example, in manual mode) by all hydraulic cylinders. The reason is to heat hydraulic oil to the operating temperature for proper function of the pressure switches (and choke).

2.6. Band saw unpacking and assembling

Remove the packing from the machine and unpack all parts.

Attention!
Switch off the main switch and lock it, before you start assembly! Otherwise, there is possibility of hazardous machine starting.

If the hydraulic unit is outside the machine (the machine only connected hoses and cables), it needs to be placed and mounted on a solid basis (floors, etc.). The mounting holes are used on the bottom (bases) of the tank.

Picture	How-to
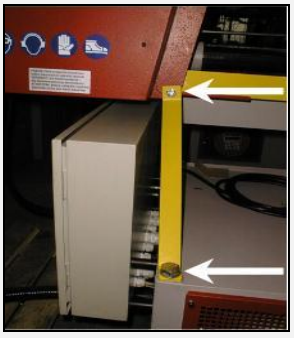	**Saw frame blocking:** • Dismantle the saw frame blocking from the machine before band saw operation. • Store the holder and screws! Install the saw frame blocking on the machine for band saw displacement! You can avoid the saw frame damage.

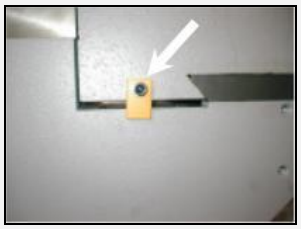

Vice blocking:

- Dismantle the vice blocking from the machine before band saw operation.
- Store the holder and screw! Install the vice blocking on the machine for band saw displacement! You can avoid the vice damage.

Assembly of the draining metal plate

- Position the draining metal plate to the pedestal.

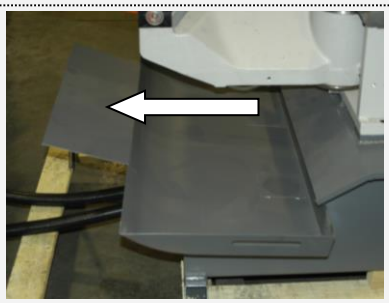

- Put the dripping board on the tank.

2.6.1. Machine installing and levelling

Check the floor supporting capacity before machine installing. If the floor capacity does not agree with requirements, you must prepare the necessary base for the machine.

Minimal requirement:

machine weight – Transverse 610.440 DGH – 1000 kg

+ weight of accessories

+ maximum weight of material

- The machine must be levelled at the horizontal position. All feet of the machine must touch with the floor after levelling
- The machine must be levelled by means of the calibrated spirit level. Spirit level is put on the vice area. Set the roller conveyors according to the spirit level.
- For machine levelling, take care that there is sufficient available space for operation, repair work, servicing of the machine and handling the material..
- The machine including appended parts and accessories must be visible from the place of operation.

2.6.2. Machine disposal after lifetime

Blown out all service fluids (cooling liquid, hydraulic oil) into designated reservoir. Dismantle machine into separate parts and dispose them in accordance with valid directives.

2.6.3. First run of the power pack

Before the first run check:

- The direction of the Pump, while run the power pack for max. 2seconds.
- The cooling fan of the motor has to rotate in the same direction as the arrow on the top of the motor cowling indicates.
- In case of wrong rotational direction, the electrical phase in the connection box is to be changed. This check is required after every disconnection from the power source
- Wiring matches with electrical and hydraulic diagrams
- the electric motors (pump and cooler) are properly connected and have the prescribed rotation
- the hydraulic accumulator with nitrogen gas to the specified value
- aux. elements work right (thermometer, level gauge, heater)

First run (Attention – working pressure on securing valve is set by producer in accoring the hydraulic diagram):

- In the short intervals activate an electric pump
- check for leaks and noise
- Bleed the hydraulic circuit
- if possible, test the circuit function with minimum load
- test the electrical equipment
- during operation monitor measuring equipment, noise, height and temperature of oil in the tank
- During this time a careful bleeding off for the whole hydraulic system is necessary. In case there is no bleeder port, the power pack will bleed itself after a while via the air breather on the tank or the return line filter.
- After multiple start-up.

2.6.4. Filling the reservoir with hydraulic oil

Oil regulations and recommendations of the manufacturer in the technical documentation (appendix) are to be carefully observed. For standard power packs we recommend the oiltype OH-HM32 (DIN 51524) of all known oil manufacturers.

Power packs have to be filled up with clean, pre-filtered oil! The purity of the hydraulic fluid must correspond to the class 10 NAS 1638 (reachable with filter ß =75)!

Filling from container, such as barrels, backets, etc. is not recommended or permitted!

The maximum oil level will be shown on the upper marking at the dipstick or the sight level glass. Overfilling has to be prevent. The maximum filling rate of 15 l/min shouldn´t be exceed.

Oil type	Kinematic viscosity v in mm^2/s in relationship to the fluid temperatur					Freezing point
	0°C	20°C	40°C	60°C	80°C	°C
OH-HM 32	220	100	32	15	7	-40
OH-HV 32	180	67	32	17	11	-40

2.6.5. Kotevní plan / Verankerungsplan / Grounding plan

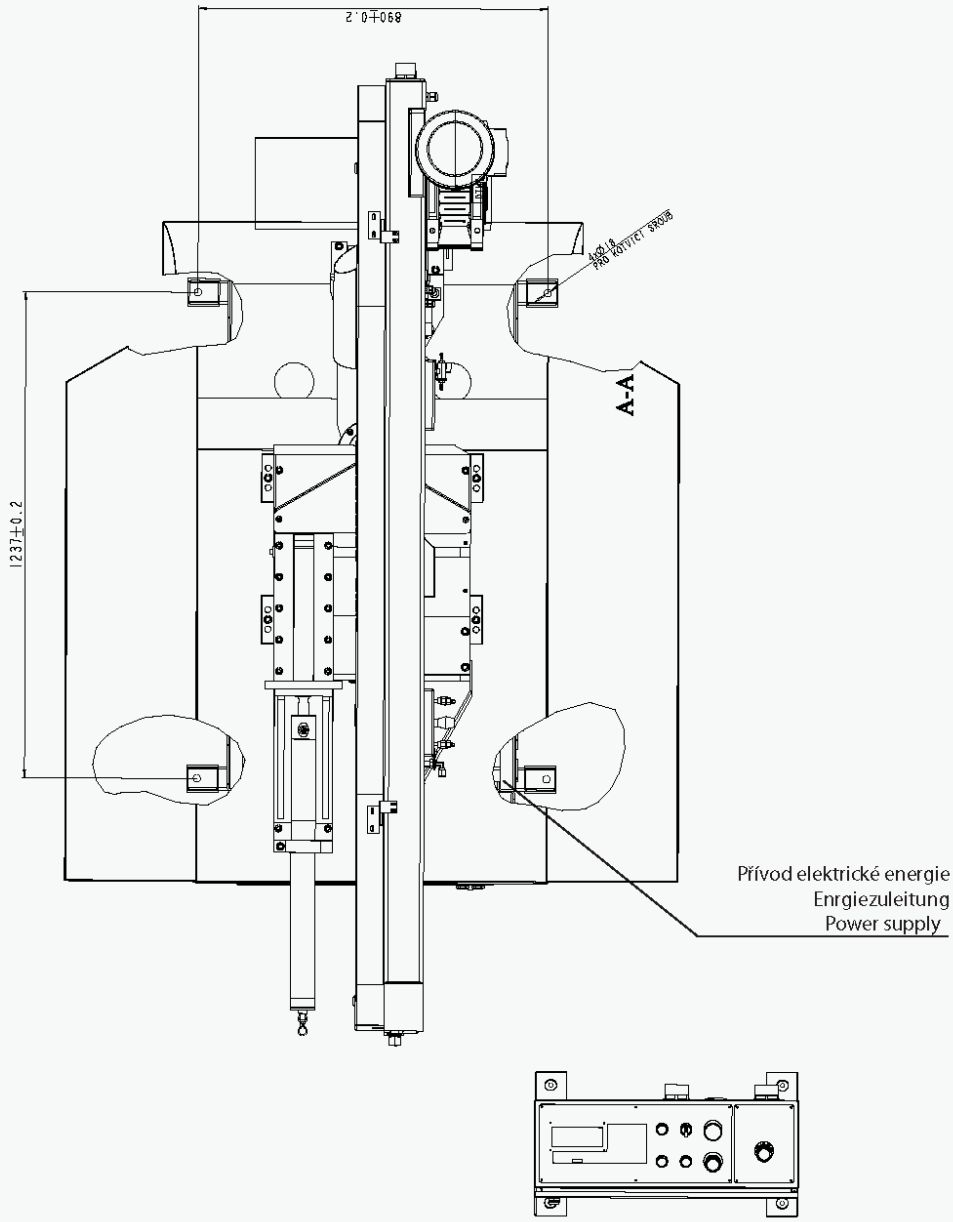

Kotvící materiál / Verankerungsmaterial / Grouding material

- 4× Hmoždina / Dübel / Plug – ø12 mm
- Vrtáno do hloubky / In die Tiefe gebohrt / Drilled to – 100 mm
- Šrouby / Schraube / Screws – 135×M16

Šrouby podložit deskami o min. rozměrech P10×100-100
- Die Schrauben mit Platten mit Minimaldimensionen P10×100-100 unterlegen
Screew must be bottomed with plates (min. dimensions P10×100-100)

Požadavky na rovinnost podlahy / Anforderungen an die Bodenebenheit / Requirements for floor flatness

±10 mm / 1 m

2.7. Electrical connection

Attention!
Only a qualified professional must carry out the servicing and repairs of the electric equipment! ***Take special care during work with electrical equipment. High voltage shock can have fatal consequences! Always keep notes about work safety.***

Electrical parameters of the machine:

- Service voltage: ~ 3×400 V (230 V), 50 Hz, TN-C-S/TN-C
- Total input / Max. fuse: 5,2 kW / 16 A

Before connecting switch off the main switch of the power supply circuit for the machine and ensure dry place when doing connecting works!

Note:
The values of the crosscut of the conductor and the rated current are in the norms.

Service voltage must agree with the line voltage! Crosscut of the supply line must respond with rated current for max. machine load.

Note:
The socket with the fork can be used only at the machines with the rated current less than 16 A and total input less than 3 kW.

Attention!
In this case the extra main switch becomes primary and the main switch on the machine has only secondary function.

In case the machine is connected with a direct connection, an extra main switch must be added which can be locked in zero position.

2.7.1. Check the direction of the saw band

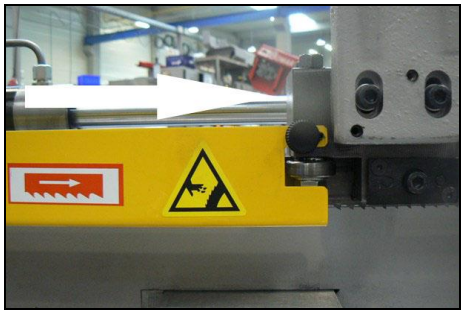

After the machine has been successfully connected, briefly switch on the machine and put the driving engine of the band in the running position. The direction must be in accordance with the arrow direction on the saw band cover. In case the direction of the saw band does not match, two phases at the terminal strip must be switched.

2.8. Filling of the cooling system

Prepare the mixture of the water and the cooling liquid. Keep the concentration specified by manufacturer. Shift away the cover from the drainage hole. Fill the mixture of the water and the cooling liquid to the tank of the cooling system. Area of the tank for the cooling liquid is discovered from the chapter *Technical data*.

Attention!
When you connect the machine to the electrical network observe correct connection of all phases!
ENGINE IN IN HYDRAULIC AGGREGATE CANNOT BE OPERATED WITH REVERSE TURNING MORE THEN 10 SECONDS!!!

Let the drainage hole opened and with the sieve during operation, because it secures the right work of the cooling system. Filling the tank with the cooling liquid, take care that the liquid does not drip out of the tank and the tank does not overflowed.

2.9. Check machine function

Check, if the machine or some parts of the machine were not damaged during transport.

Check, if covers are installed and functional. Check by means of the Tenzomat if the saw band is correctly stretched. If it is necessary, you can stretch the saw band according to chapter *Selection and replacement of the saw band*. Values of the saw band stretching are on the Tenzomat. Switch on the main switch and check the motors and systems (saw band drive, hydraulic pump, cooling pump, chips conveyor).

Open and close the main vice. Turn the saw frame of the band saw from one outer position to other outer position. Raise the saw frame to the top position and drop the saw frame to the lowest position.

Start the machine with the cooling pump and let it run without load until the cooling system will be filled with cooling liquid. As soon as the cooling liquid starts to escape from the nozzles of the cooling system, the cooling system is ready for the operation. Carry one cycle of cutting without material. Check, if the machine runs with no irregularities. If all machine functions are right, the machine is ready for operation..

2.10. Saw band

Refit the saw band cover only after you have installed and tightened the saw band.

2.10.1. Saw band size

5200×34 (32)×1,1 mm

2.10.2. Selection of the saw band tooth system

The manufacturers provide the saw bands with constant and variable tooth system. The important factor for selection of the tooth system is length of the cutting canal with respect to the size of the product

1. *Constant tooth system* – the saw band has parallel tooth pitch all over length. This way is suitable for cutting of solid material.

BOMAR recommended Variable tooth system for band saw.

2. *Variable tooth system* – tooth pitch is variable. Variable tooth system is used for profiled materials and bundle cutting. Variable tooth pitch lowers vibration of the saw band, increases service life of the saw band and quality of the cutting area.

In tables, there are advised type of the tooth system depending on sizes and form of the cutting material.

Footnotes:

$Z_{tt}Z$ – teeth number on one inch S – tooth with zero angle of the teeth K – tooth with positive angle of the teeth

Examples of the tooth system marking:

32 S – number „32“ means 32 teeth on one inch (that means constant tooth system), letter „S“ marks teeth with zero angle of the tooth.

4–6 K – number „4–6“ means 4 till 6 teeth on one inch
(that means variable tooth system); letter „K“ marks teeth with positive angle of the teeth.

2.10.3. Saw band running-in

Running-in: Cut the material with the frame lowering reduced to 50% only. When vibrations occur increase or decrease the band speed.

When cutting small pieces run the band until approximately 300 cm^2 of material has been cut. When cutting large pieces run the band for 15 minutes approximately. When the band has been run, increase the lowering-speed to normal speed. The running in of the saw band avoids micro-breaks on the cutting edges of new saw band ensuing from first excessive stress. This would decrease service life substantially. The optimal running in of the saw band produces ideal rounded cutting edges and therefore the conditions for an optimal service life.

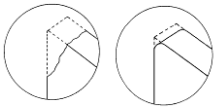

Note: ***Run regrinding saw bands too.***

2.10.4. Tables for teeth selection

SHAPED MATERIAL (D_p, S = mm)

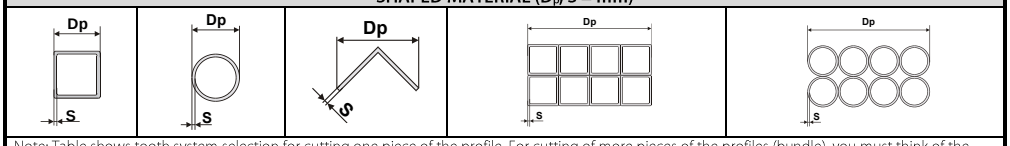

Note: Table shows tooth system selection for cutting one piece of the profile. For cutting of more pieces of the profiles (bundle), you must think of the size of the wall as double size of the wall of one profile (that means, size „S" equates to 2×S). In table, there are tooth systems constant and variable.

Size of the wall S [mm]	Tooth system (Z_pZ) Outer diameter of the profile D_p [mm]					
	20	40	60	80	100	120
2	32 S	24 S	18 S	18 S	14 S	14 S
3	24 S	18 S	14 S	14 S	10–14 S	10–14 S
4	24 S	14 S	10–14 S	10–14 S	8–12 S	8–12 S
5	18 S	10–14 S	10–14 S	8–12 S	6–10 S	6–10 S
6	18 S	10–14 S	8–12 S	8–12 S	6–10 S	6–10 S
8	14 S	8–12 S	6–10 S	6–10 S	5–8 S	5–8 S
10	-	6–10 S	6–10 S	5–8 S	5–8 S	5–8 S
12	-	6–10 S	5–8 S	5–8 S	4–6 K	4–6 K
15	-	5–8 S	5–8 S	4–6 K	4–6 K	4–6 K
20	-	-	4–6 K	4–6 K	4–6 K	3–4 K
30	-	-	-	3–4 K	3–4 K	3–4 K
50	-	-	-	-	-	3–4 K

Size of the wall S [mm]	Tooth system (Z_pZ) Outer diameter of the profile D_p [mm]					
	150	200	300	500	750	1000
2	10–14 S	10–14 S	8–12 S	6–10 S	5–8 S	5–8 S
3	8–12 S	8–12 S	6–10 S	5–8 S	4–6 K	4–6 K
4	6–10 S	6–10 S	5–8 S	4–6 K	4–6 K	4–6 K
5	6–10 S	5–8 S	4–6 K	4–6 K	4–6 K	3–4 K
6	5–8 S	5–8 S	4–6 K	4–6 K	3–4 K	3–4 K
8	5–8 S	4–6 K	4–6 K	3–4 K	3–4 K	3–4 K
10	4–6 K	4–6 K	4–6 K	3–4 K	3–4 K	2–3 K
12	4–6 K	4–6 K	3–4 K	3–4 K	2–3 K	2–3 K
15	4–6 K	3–4 K	3–4 K	2–3 K	2–3 K	2–3 K
20	3–4 K	3–4 K	2–3 K	2–3 K	2–3 K	2–3 K
30	3–4 K	2–3 K	2–3 K	2–3 K	1,4–2 K	1,4–2 K
50	2–3 K	2–3 K	2–3 K	1,4–2 K	1,4–2 K	1,4–2 K
75	-	2–3 K	1,4–2 K	1,4–2 K	1,4–2 K	0,75–1,25 K
100	-	-	1,4–2 K	0,75–1,25 K	0,75–1,25 K	0,75–1,25 K
150	-	-	-	0,75–1,25 K	0,75–1,25 K	0,75–1,25 K
200	-	-	-	0,75–1,25 K	0,75–1,25 K	0,75–1,25 K

SOLID MATERIAL (D = mm)

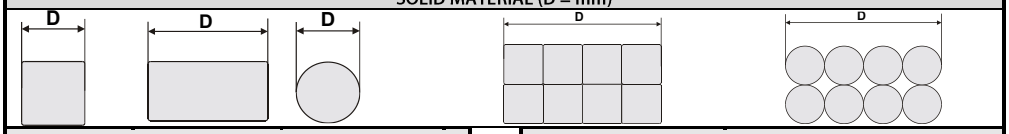

Constant tooth system	
length of the cut D	tooth system (Z_pZ)
to 3 mm	32
to 6 mm	24
to 10 mm	18
to 15 mm	14
15–30 mm	10
30–50 mm	8
50–80 mm	6
80–120 mm	4
120–200 mm	3
200–400 mm	2
300–800 mm	1,25
700–3000 mm	0,75

Variable tooth system	
length of the cut D	tooth system (Z_pZ)
to 30 mm	10 –14
20–50 mm	8–12
25–60 mm	6–10
35–80 mm	5–8
50–100 mm	4–6
70–120 mm	4–5
80–150 mm	3–4
120–350 mm	2–3
250–600 mm	1,4–2
500–3000 mm	0,75–1,25

3. Machine control

3.1. Starting the band saw

» 1. Switch on the main switch of the band saw. The main switch is situated on the side of the switchboard.

2. Switch on the safety circuit of the band saw (button **3**– control panel of the band saw).

3.2. Control panel

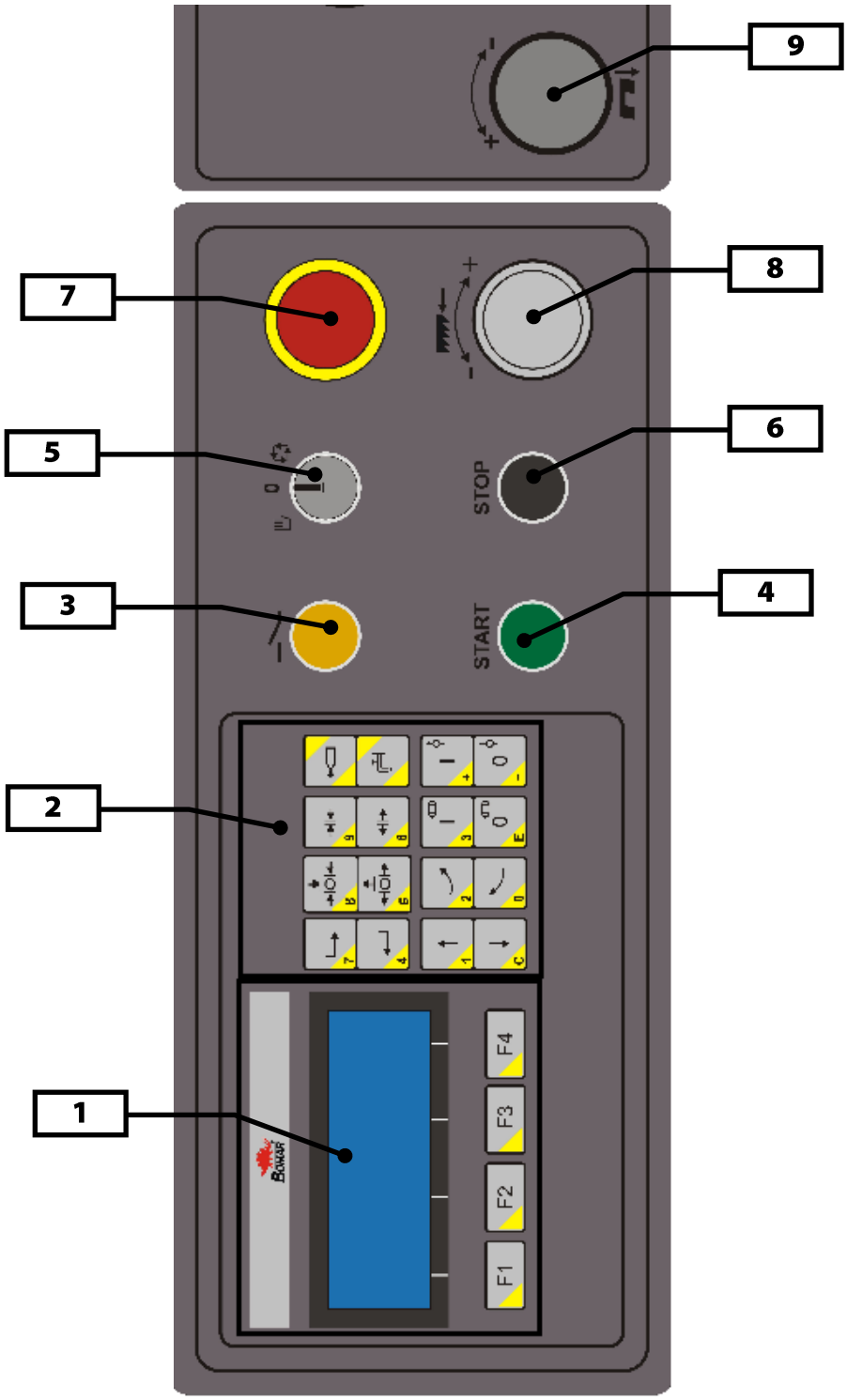

3.2.1. Control panel description

1	**LCD Display** Onto display are described all runnind processes, control with functional buttons **F1-F4**
2	**Control buttons / numeric keypad**
7 / 4	**No function**
8 / 5	**No function**
9 / 6	**Clamp / release vice** In manual cycle pressing and holding the button allows you to release pressure or clamping vice.
	Cooling system selection Cooling with Microniser (optional cccessories) Cooling with water cooling pump runs even when the saw band drive isswitch off.
1 / C	**Movement of the arm** Pressing and holding a button or trigger arm lifts the lifting hydraulic cylinder. When lifting the arm using the arm can be lifted in its entirety lifting cylinder. On the down can be activated by simultaneously pressing the **rapid move** functional button F1.
2 / 0	**No function**
3 / E	**Turn on / off the band drive** In manual mode the button is displayed "I" switched band drive, the button with the symbol "0" switch off
+ / -	**Turn on / off the hydraulic circuit** Button with the symbol "I" turns the hydraulic circuit, the button with the symbol "0" disables the hydraulic circuit. The hydraulic circuit is automatically switched on when needed.
3	**Safety circuit** Switch on the safety circuit by pressing button.
4	**Button START - Switch on the semi-automatic cycle** After pressing the button will start the cutting cycle

5	**Selecting a mode machines** 0 for servicing and settings manual mode semi-automatic mode **Note**: The functions performed in both manual and semi-automatic mode are the same, but only in semi-automatic cycle it is possible to use the START / STOP (ie start / off cycle)
6	**Button STOP - Switch off on the semi-automatic cycle** After pressing the button will turn off the interruption or of cutting cycle
7	**TOTAL – STOP button** In emergency causes the machine must be immediately switched off.
8	**Frequency convertor** Turn to change the speed of the saw band in the range of 20-90 m / min
9	**Governing valve for adjust the spped of the arm sinking to the cut** Adjust the speed of the arm sinking to the cut by governing valve. **Notice:** If you keep closing the throttle valve too tightly, the valve seat may wear off which causes its leakage. Therefore, close the valve always gently.

3.3. Machine setup

Machine setup mode is activated by switch on control panel. Switch must be in **"0"** position.

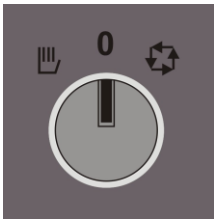

After swiching into position "0" is displayed on LCD this screen.

Reset to 0 a display showing angel on console by pressing **F2**.

3.3.1. SERVIS

After pressing the **F1** functional key can be set servis parameters that are password protected (947).

Control and movement in SERVIS can be set using the function keys **F1 - F4.**

On display	Descriptiom
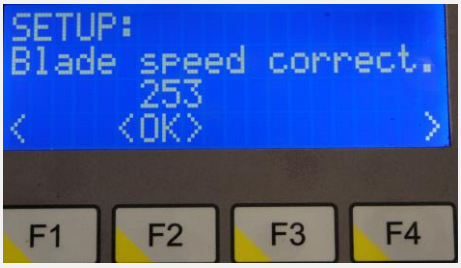	**Blade speed correction** • Constant for calculation of blade speed display values from analog input. • **F1** go back, **F4** next menu screen, **F2** enter value

	**Sensor** • Display variable sensor arm (optional accessories) • Use to check the functionality of the sensor on the arm • Read only • **F1** go back, **F4** next menu screen
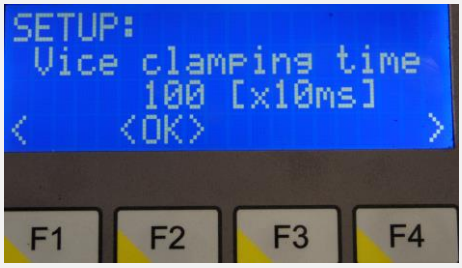	**Vice clamping time** • Watch vice clamping time in ms. • **F1** go back, **F4** next menu screen, **F2** enter value
	**The type of machine.** • Display the machine type (the value set by the manufacturer) • Read only

3.3.2. SETUP

After pressing the **F4** functional key can be set setup parameters that are not password protected.

Control and movement in SETUP can be set using the function keys **F1 - F4.**

On display	Description
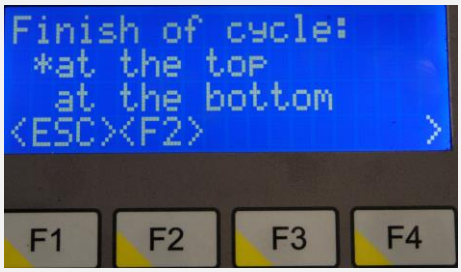	**Finish of cycle** • At the top – arm after cut starts above the material and cutting cycle ends • Athe the bottom – arm after cut remains in the lower position, the above material does not exit • **F1** go back, **F4** next menu screen, **F2** enter value

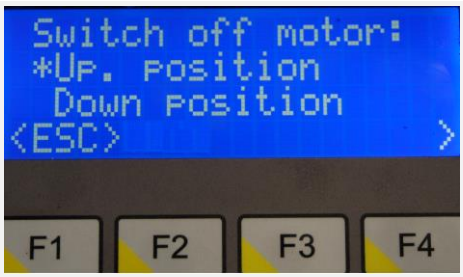

Turn off motor after cut

- Up position – saw arm move up after cut and then turn off drive of saw blade.
- Down position – drive of saw band turn off immediately after cut.
- **F1** go back, **F4** next menu screen

Upper vice

- Allows to able / disable the upper vice in the cutting process
- **F1** go back, **F4** next menu screen, **F2** enter value

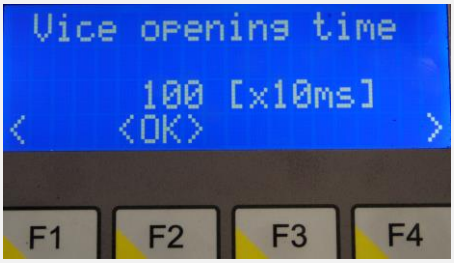

Vice opening time

- Watch vice opening time in ms.
- **F1** go back, **F4** next menu screen, **F2** enter value

Upper vice opening time

- Watch upper vice opening time in ms.
- **F1** go back, **F4** next menu screen, **F2** enter value

Switch off hydraulic

- Setting the hydraulic unit off when idle machines
- **F1** go back, **F4** next menu screen, **F2** enter value

Language

- Choose menu language
- **F1** go back, **F4** next menu screen, **F2** enter value

Displaying of speed

- Displaying of band speed according to the selected units (m / min or ft / min)
- **F1** go back, **F4** next menu screen, **F2** enter value

3.4. Machine error messages

Error	Information
SAFETY BUTTON is OFF F1 F2 F3 F4	Saffety button (pos. **3** on kontrol panel) is not ON. Press **F4** to confirm error.
TOTALSTOP pressed F1 F2 F3 F4	Total Stop button is active. Turn button **TOTAL STOP** according to the arrows. Press **F4** to confirm error.
Blade tension faulty F1 F2 F3 F4	Saw blade in properly tensioned. Press **F4** to confirm error.
Faulty motor protec. F1 F2 F3 F4	Engine temperature protection is active. **Do not overload saw!** Press **F4** to confirm error.

3.5. Machine control

3.5.1. Semi-automatic cycle

1. Lift the saw arm to the top position by pressing button 1.
2. Open the vice by pressing button 6.
3. Clamp material to the vice by pressing button 9.
4. Lower the frame about **10 mm above the material** by button c.

> *Attention!*
> ***Do not move the saw frame to the material, when the saw band driving is not running! Do not move the saw frame to the material with accelerated motion! The saw band can be damaged!***

5. Set the maximal height of saw arm by F2.

   If arm height was not set the screen below appears .

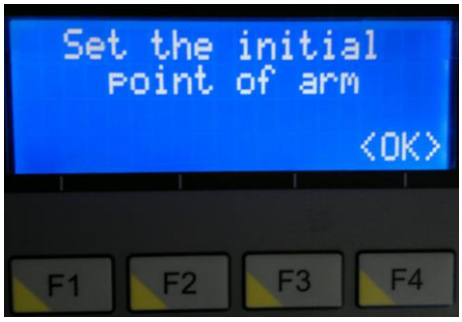

   Press button **F4** and then set the position of arm by buttons 1 and c and confirm by pressing **F2**.

6. Press button **START** (position **4**) of semi-automatic cycle.

   Set the saw band speed according to the kind of the cutting material.

   Set the speed of the arm sinking by adjust governing valve (position **9**).

> *Attention!*
> ***Press button „6“ (STOP of semi-automatic cycle). In risk of injury or damage of the band saw, press the emergency button TOTAL STOP “7”!***

7. The band saw clamps the material to the vice and it makes the cut.
8. Open the vice. If the vice is not opened, you can open it by button 6.
   Remove the blank ((cut off a piece of material).

9. You can repeat whole process.

3.5.2. Cycle breaking

» **STOP button**

Semi-automatic cycle is interrupted by pressing button **STOP** (position **6**) of the semi-automatic cycle.

The arm is lifted to the top position and the saw band drive is stopped..

By pressing button ***START*** (position **4**) of the semi-automatic cycle, you can start the cycle.

TOTAL STOP button

In case of the risk, press button **TOTAL STOP** (position **7**).

After pressing **TOTAL STOP** button, saw band drive is immediately broken and the arm sinking is stopped.

Reactivation

1. Turn button **TOTAL STOP** according to the arrows (on the button).
2. Switch on the **Safety circuit** by button (position **3**).
3. By pressing button **START** (position **4**) of the semi-automatic cycle), you can start the cycle. The arm is lifted to the top position and the saw band starts the cycle.

3.6. Band saw adjusting

3.6.1. Cutting speed adjusting

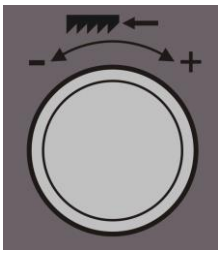

Speed of the saw band is possible change from ***20 to 90 m/min***. You can effect to adjusting speed of the saw band following.

Use the frequency convertor by button ***8*** (position on control panel) to adjust requested speed of the saw band. You can see the speed on display. Band speed is displayed on the screen **1** (position on control panel) during one semi-automatic cycle.

3.6.2. Speed adjustment of the arm lowering

Set the speed of the arm lowering to the cut by control valve for Cutting pressure regulation **9** (position on control panel).

- Set the lower speed of the arm lowering to the cut by turning the switch clockwise.
- Set the higher speed of the arm lowering to the cut by turning the switch anti-clockwise.

Notice:
If you keep closing the throttle valve too tightly, the valve seat may wear off which causes its leakage. Therefore, close the valve always gently.

3.6.3. Angular cut setting

The cut angle is possible set from **-60°** to **+60°**.

1. Lift the saw frame.

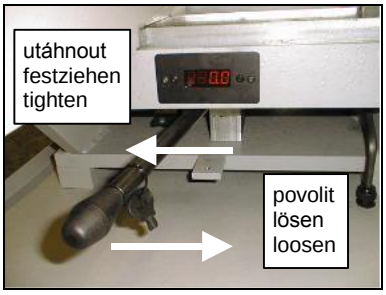

2. Loosen the securing lever of the console and set the desired cut angle. Setting cut angle is depicted on the display over the securing lever.
3. Tighten the securing lever of the console.

4. Shift the vice according to setting angle of the cutting. Shift the vice to the right for angle of the cut, which is less than 0°, shift the vice to the left for angle of the cut 0° or for angle of the cut, which is bigger than 0°.

angle < 0°	angle ≥ 0°
	

Set the saw frame to the position 0° and press button zeroizing of the angle (on the distribution box under the main switch) after main switch starting of the machine. Angles admeasurement is secured.

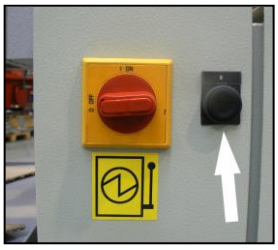

3.6.4. Optimal adjusting of the guide cubes span

If you want to achieve a smooth and precise cut, it is helpful to position the guide cube as close as possible to the material.

1. Release the lever of the left listel and move left part of the guide apparatus so that the left guide cube edge is as close to the cut material as possible.
2. Lower the frame to the lower position and check the position of the guide cube towards vice loading area. The guide cube must be a distance of at least 10 mm from the vice loading area.
3. Tighten the lever of the gib and check the guide cube setting once more for possible collision with binding table or vice jaw.

3.6.5. Cutting pressure adjusting

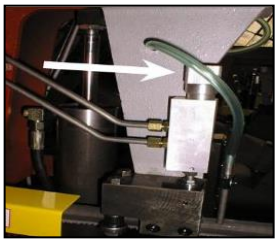

The band saw Transverse 610.440 DGH is equipped with automatic down-feed regulator on both guiding cubes.

Adjusting the down-feed regulator is performed with regulating wheel on the guiding cube. Screw on the wheel, the pressure is increased. Screw off the wheel, pressure is lowered.

Picture	How-To
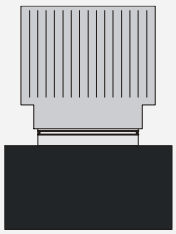	1. One visible neck – Solid material over Ø300 mm.

Picture	How-To
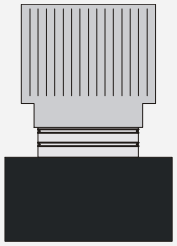	2. Two visible necks – Solid material to ∅100 -∅300 mm.
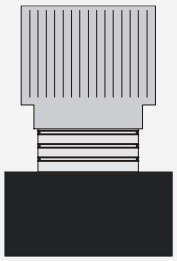	3. Three visible necks • Pipes and shapes material with surface from 10–15 mm. • I-shaped material from 200–500 mm. • Solid material to ∅100 mm
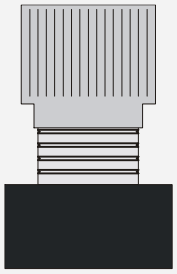	4. Four visible necks • Pipes and shapes material with surface to10 mm. • I-shaped material to 200 mm

3.7. Material insertion

- Never walk under a suspended load!
- Never climb onto the gravity-roller conveyor!
- Do not hold the material for clamping material to the vice! The vice can cause injury!

3.7.1. Handling agent selection

- Use the strong handling agents to lift and transfer the material!
- Handle with the material only with the lift truck or use the suspension strands and the crane!
- Do not use the lift truck or crane in case that you do not have the license to handle with it!

3.7.2. Insertion

Insert material to the vice and ensure that the material cannot move in the vice or fall from the vice after the clamping. If you cut long pieces of the material (for example rod, tube), you must use the roller conveyors for material shifting to the band saw. Contact Bomar for more information about roller conveyors

Make sure the conveyor is long enough and the material cannot tip off the conveyor.

Be especially careful with round materials that it always stays on two vertical rollers and that it cannot fall off the conveyor!

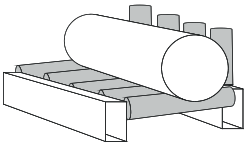

3.7.3. Bundle material cutting

If you want to cut the material in the bundle, there are suggestions for the positioning of bundles

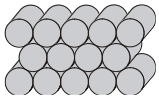

Round material bundle: Take care especially with round material that the bars are put according to the picture. If the bars are put differently, you may have problems with movement.

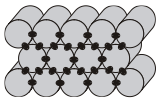

Always weld the material at the rear end of the bundle to secure it from moving.

Before welding always, switch the machine off at the main switch! The magnetic fields, which often occur during welding, may damage the controls!

Square material bundle:

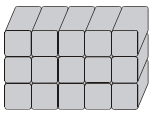

Attention:
Not all material shapes are suitable for bundle cuts. Keep the recommendation of your supplier of the saw bands for material insertion to the bundle.

4. Machine service

4.1. Saw band dismantling

1. Drive the saw frame by pressing button – „Raise saw frame " into the top position.

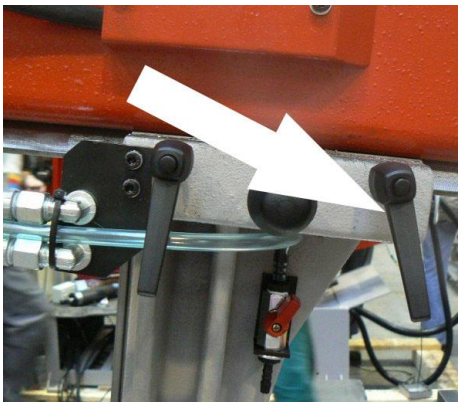

Note:

If the saw band is breaking, press button „Raise saw frame" and .the stop of the limit switch for monitoring of saw band tensioning together.

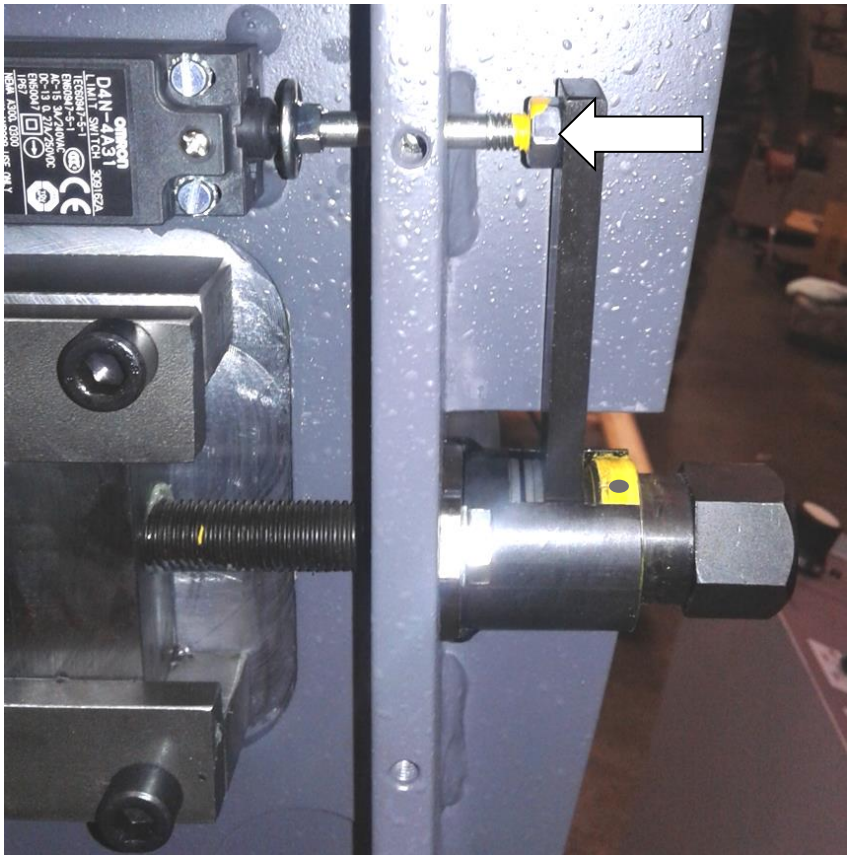

2. Release the securing lever of the left guiding cube holder and whole left part of the guiding including left cover move to the right.

3. Dismantle left cover of the saw band. The cover is fastened by plastic-headed screw.

4. Loosen locks on the rear cover of the frame and lift it to the up.

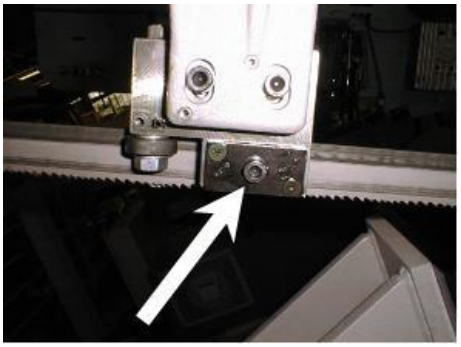

5. Tighten the screw on both guiding cubes. The saw band is released in the guiding cubes.

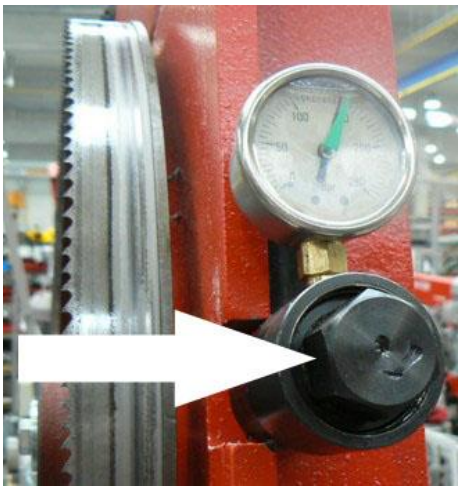

6. Loosen the saw band stretching by means of the screw. The saw band is possible remove from the wheels.

7. Remove the saw band from wheels.

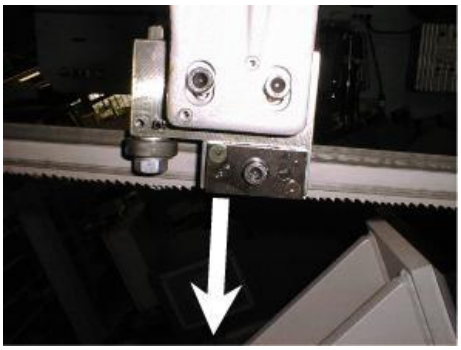

8. Carefully remove the saw band from the guide cubes.

4.2. Saw band installation

1. Before installation clean all track wheels and guide shoes thoroughly, removing all traces of chips and dirt.

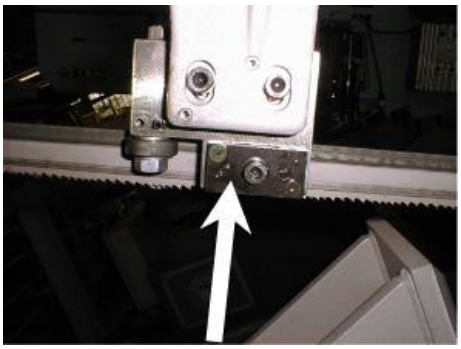

2. Install the saw band to both guiding cubes. Make sure the saw band lies on both track wheels and it is pushed all the way to the top.

3. Insert the saw band on both guiding wheels. Make sure the rear part of the saw band suits to the edge of the wheels.

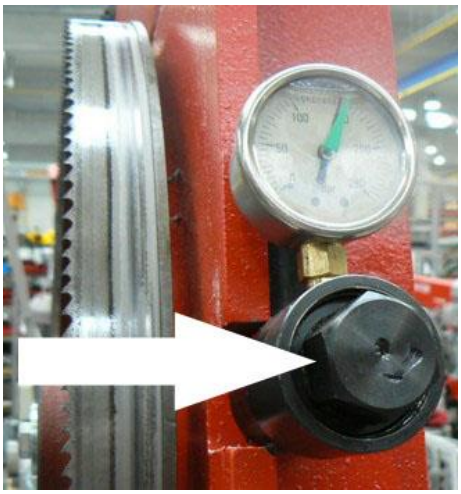

4. Stretch the saw band by means of the screw so it does not fall from the wheels.

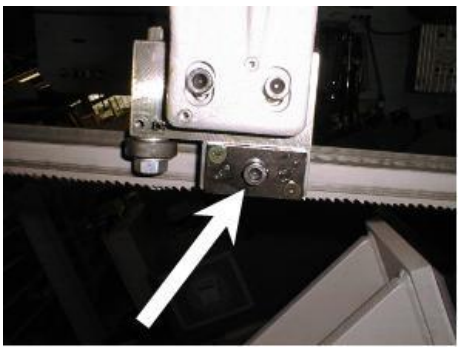

5. Release the screw on the both guiding cubes so it was possible by saw band move in the guiding cubes.

6. Close the rear cover of the frame.

7. Install left protective cover of the saw band.

4.3. Saw band stretching and inspection

Right saw band stretching is one of the most important criteria's, which influents accuracy and saw band service life. Stretch the saw bands according to the selected saw band and the band saw. Keep the recommendation of your manufacturer.

Pilový pás Sägeband Saw band	Napětí pilového pásu Sägebandspannung Blade tension	Napětí pilového pásu PSI (pro Tenzomat) Sägebandspannung PSI (für Tenzomat) Blade tension PSI (for Tenzomat)
20 x 0,9 mm	160 $N.mm^{-2}$	23 500
27 x 0,9 mm	180 $N.mm^{-2}$	26 500
34 x 1,1 mm	210 $N.mm^{-2}$	30 500
41 x 1,3 mm	240 $N.mm^{-2}$	35 000
54 x 1,3 mm	240 $N.mm^{-2}$	35 000
54 x 1,6 mm	280 $N.mm^{-2}$	40 600
67 x 1,6 mm	290 $N.mm^{-2}$	42 000
80 x 1,6 mm	300 $N.mm^{-2}$	43 500

4.3.1. Mechanical indicator of belt tightening

To facilitate tightening of the belt, a mechanical indicator is installed on the machine by default, enabling the belt to be tightened to the optimum value easily and quickly.

Mechanical indicator of belt tightening

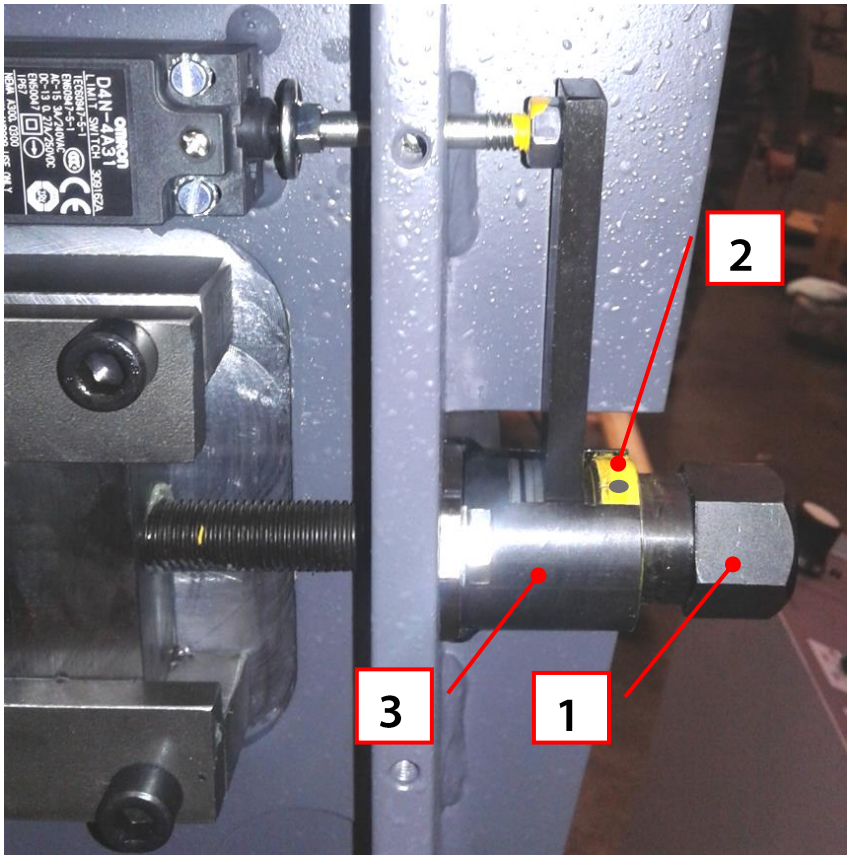

1	Tightening screw
2	Yellow ring – indicator of correct belt tightening
3	Bush

1. **After the belt replacement, the tightening screw (Pos. 1) must be tightened** so that the face of the yellow ring (Pos. 2) be aligned with the face of the bush (Pos.3)

   The areas indicated in red in Fig. 1 must be aligned.

   Fig.1

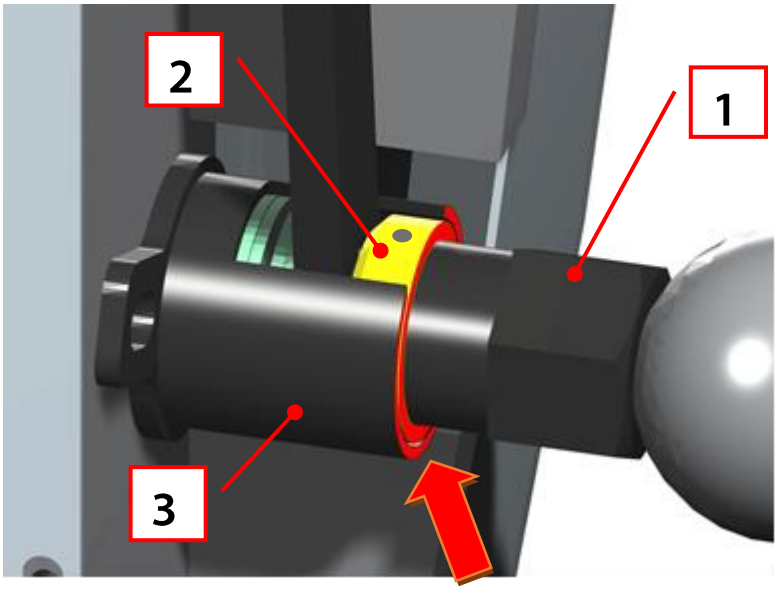

NOTE:

The belt length with deviations within normal tolerances has no influence on the method of the belt tightening indication!

If the belt length deviations fall within normal tolerances and the belt is tightened correctly, the face of the yellow ring (Pos. 2) is always aligned with the face of the bush (Pos. 3), regardless of the real dimension of the belt.

Belts with deviations outside the normal tolerances must not be mounted on the machine!

4.3.2. Hydraulic indicator of belt tightening (optional accessory)

If the machine is equipped with a hydraulic indicator of the belt tightening (optional accessory), the belt tightening value can be seen on the indicator gauge.

The optimum working tightening value of the belt is indicated with a green arrow.

4.3.3. Saw band inspection

Check the saw band in the guiding cubes and on the wheels

1. Check, if the saw band is right in the guiding cubes..
2. Switch on the saw band drive and then after 10 seconds switch off saw band drive. If the saw band drive is not possible to switch on, set the limit switch of the saw band stretching.
3. Switch off the main switch.
4. Open cover(s) of the wheels and check position of the saw band on the both wheels..

- If the distance between backside of the saw band and the offset wheel is **1 mm**, setting is right.
- If the distance is bigger than **1 mm**, or the saw band is on the offset of the wheel, set the saw band.

5. Close cover of the saw band.

4.4. Saw band run adjustment on stretching wheel

Saw band run on the stretching wheel must be regularly inspected. The inspection has to follow every saw band replacement.

4.4.1. Saw band run inspection

If the run is not correct, the following problems may occur:

- **The saw band falls off the wheel** – The saw band and protective cover can be damaged.
- **The saw band runs on the wheel rim** – The saw band and wheel rim can be damaged

1. Start and stop saw band drive.
2. Stop the main switch!.

3. Open rear cover of the saw frame.

4. Check saw band placing on the wheels.

- If the distance of the rear part of the saw band from wheel rim is **1 mm**, setting is right.
- If the distance is bigger than **1 mm**, or the saw band runs on the wheel rim, saw band run must be set.

4.4.2. Saw band run setting

Saw band run is set with screw (arrow) in the stretching cube on the saw arm. Right distance rear part of the saw band from wheel rim is **1 mm**.

- Turn with the screw to the right, the saw band is closer to the stretching wheel rim.
- Turn with the screw to the left, the saw band is far from the stretching wheel rim

Check saw band run adjustment again.

4.5. Adjusting of the limit switch of the saw band stretching

After the saw band is replaced, the saw band stretching must be checked. If the limit switch is not adjusted correctly, the band is stretched too little or too much.

1. Dismantle the protective cover

2. Tighten the saw band on the optimal value using TENZOMAT (see table for TENZOMAT)

- If the drive engine is switched on, but it is not running, turn with the screw clockwise, until the engine begins run..
- If the drive engine is possible switched on, turn with the screw anticlockwise, until the engine is stopped and then turn with the screw clockwise, until the engine begins run.

3. Install the protective cover.

4.6. Guide cubes adjustment

The guiding cubes are set from the manufacturer. Cubes are secured with two pins. It is not necessary to set the guiding cubes all the while of the lifetime.

4.7. Hard metal guides adjustment

Hard metal guides adjustment is one of the most important criterions which influences cutting accuracy and saw band life. Therefore, it is essential to check regularly that hard metal guides adjustment is correct.

1. Release the screw. The screw holds the guide in the guiding cube. Make sure, that the guide of the hard metal does not falls

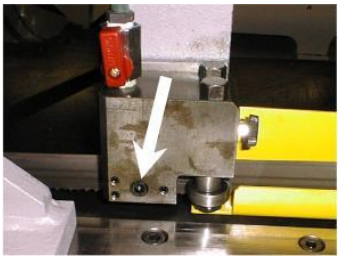

2. Press the guide on the saw band by tighten three screws. Check, if the hard metal guide does not put up to much resistance against the movement of the band. As soon as it is possible to move the band without resistance (and between saw band and the guide is not width) the hard metal guides are adjusted.

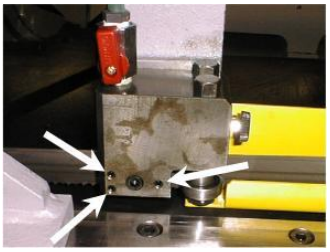

3. Tighten the screw. The screw holds the guide in the guiding cube. Make sure, that the guide is not damaged

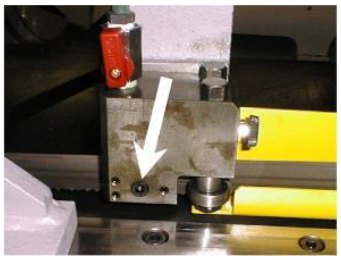

Make sure that the hard metal guides do not put up to much resistance otherwise the lifetime of the saw band and drive decreases.

4.8. Saw frame lower stop position adjustment

The lower stop limits the lowest position of the saw frame. This stop point has to be checked at least once a month. If the lower stop point is incorrectly adjusted, the cutting table can be damaged or the material will not be cut completely.

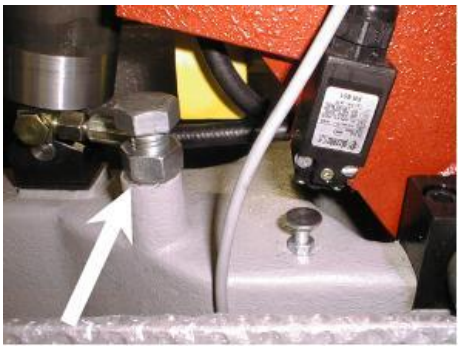

1. Lift the saw frame to the top position.
2. Release the nut of the screw and set it to the desired value.
3. Secure the screw with nut.
4. Set the limit switch of the saw frame lower position.

4.9. Limit switch of the saw frame lower position adjustment

If the lower stop of the saw frame was set, the limit switch must be set again.

Check setting

Lower the saw frame to the bottom position. If the saw frame is on the lower stop and the limit switch was responded, the limit switch adjustment is right. If the limit switch is not right, it must be set.

Limit switch setting

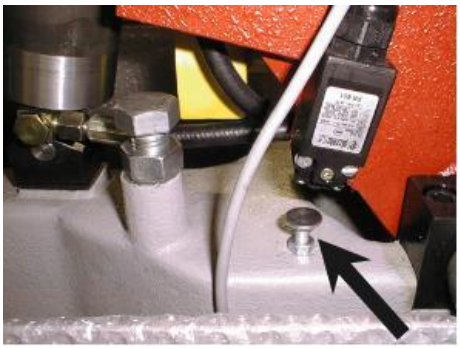

1. Release the nut of the stop screw of the switch and screw the screw.
2. Lower the saw frame to the lower stop and start saw band drive.
3. Screw off the stop screw of the switch, until the saw band drive is not stopped.
4. Secure the screw with the nut and check limit switch adjustment again.

4.10. Adjustment of the securing cube of the turning lever

The securing cube is adjusted right from the manufacture, but if the saw frame is not secured, the securing cube must be adjusted. Check the functionality of this cube regularly; if the console is not fastened correctly, inaccuracy may occur.

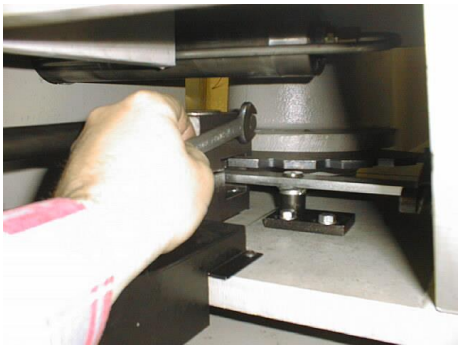

1. Release the fixative screw of the securing lever. By lever is possible to move.
2. Turn by lever to the left side to the stop and fasten the fixative screw again.

3. Secure the console by lever and carry out the inspection.

If the adjustment is correct, the saw frame cannot be turned around.

4.11. Pressure switch adjustment

Be careful for working on the hydraulic system!

In hydraulic system stays residual pressure after hydraulic aggregate stopping!

- The pressure switch is located on the vice hydraulic cylinder.

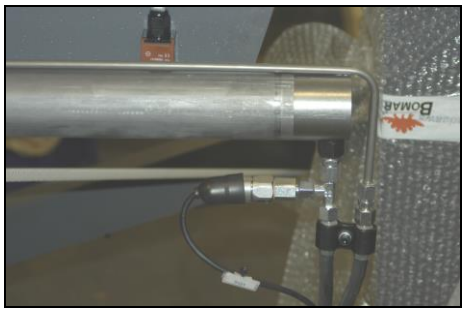

- Pull off the elastic cover of the pressure switch (carefully – outlets must not be broken).

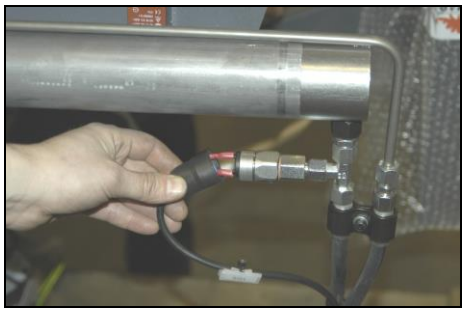

- Set the sensitivity of the pressure switch by means of the screwdriver.

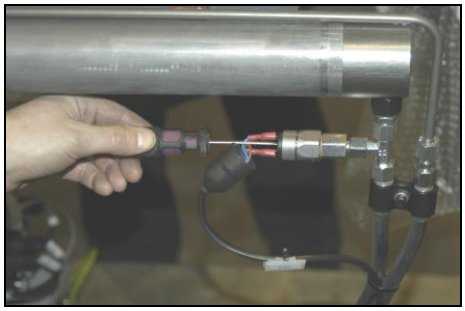

- Turn by screwdriver to the left, the sensitivity is bigger Turn by screwdriver to the right, the switch will be clip with higher pressure

Check limit switches adjustment:

- ***The vice is clamped*** – The pilot lights of the control system are lighted
- ***The vice is opened*** – The pilot lights of the control system are not lighted
- ***The vice is on the move*** – The pilot lights are not lighted, they are not winked

Return the cover on the pressure switch after adjustment

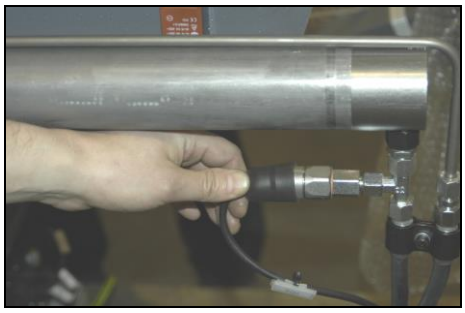

4.12. Pressure adjustment of the hydraulic system

Be careful for working on the hydraulic system!

In hydraulic system stays residual pressure after hydraulic aggregate stopping!

- Switch off the machine. Remove the screw coupling from the vice hose.

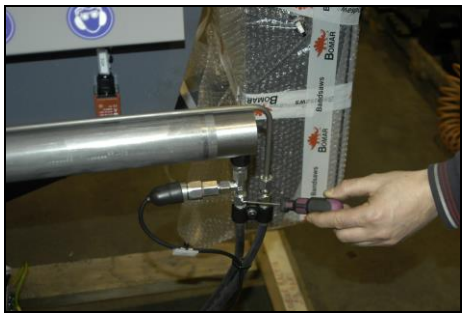

- Screw on the manometer in place of the screw (thread G1/4") with range 0 – 60 bar.

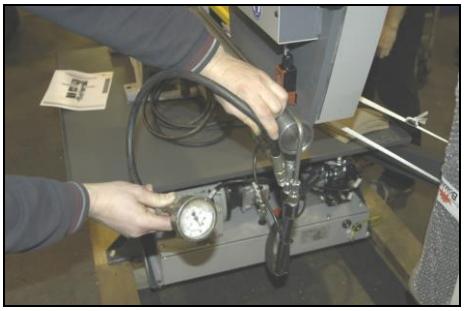

Switch on the machine; turn the switch with the key to the position „set mode“.

Work extremely carefully now!!!

- The hydraulic circuit can be pressurized by pushing the vice clamping button on the control panel.
- Loosen the backnut of the setting screw.

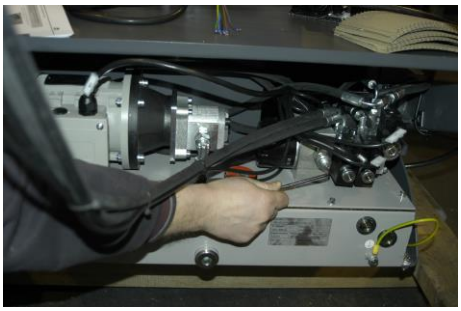

- Adjust the pressure by means of the setting screw and pressure gauge. If the required pressure has been adjusted, tighten the backnut. Switch off the main switch of the machine.

Remove the pressure gauge and screw back the vice hose.

4.13. Brush adjustment

The brush for chip removal from the saw band influences cutting durability, saw band lifetime and wheels lifetime, hard metal guides and finally the cut accuracy. Brush adjustment must be checked every shift.

1. Lift the cover of the saw frame.

2. Release screws on the brush holder.

3. The brush must touch with teeth of the saw band.

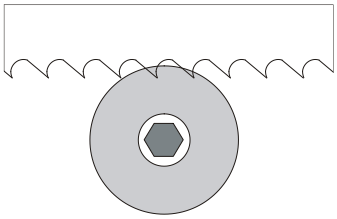

Notice!
The brush** must not **touch the bottom of the saw teeth!!

4. Tighten the screws on brush holder after brush adjustment.

4.13.1. Adjustment of the cutting pressure regulation

Set the body of the regulation by adjusting handle. It is under the handle. Set it on the second groove. There is visible one neck (pos. 1, 2).

Screw the stopper screw to the maximum, or the valve will be blocked (pos. 3).

Now the frame can be freely moved up only, because the saw frame movement is blocked with the governing valve.

Press button „ saw frame down „ screw on the setscrew.

Screw in the stop screw as long as you reach the optimal speed of the frame sinking.

Optimal speed of the frame sinking is between 35 sec.

Secure the adjusting screw by means of the nut after reaching of the sinking speed.

Switch on the engine of the drive and check speed of the saw frame sinking again.

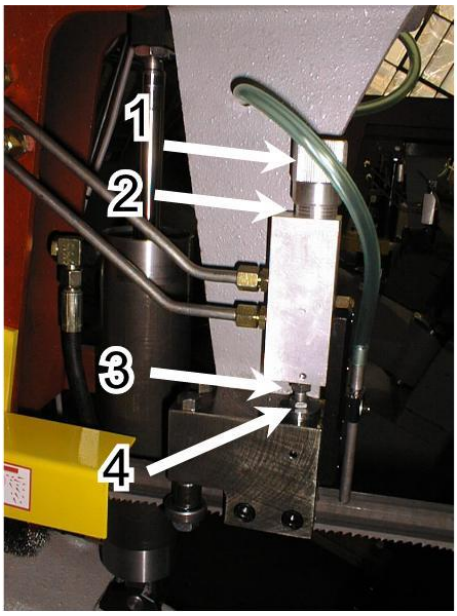

4.13.2. Adjustment of a throttle valve

1. Switch off the machine by its main switch. Let the sawing head down at the bottom. Close the throttle valve gently.

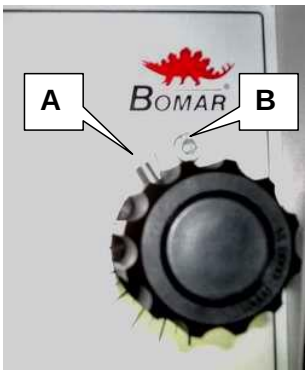

2. The worm screw (pos. A) must be next to the stop (pos. B), when the valve is closed.

3. Otherwise, you must loosen the worm screw, lift the plastic knob and close the throttle valve to the maximum. Next loosen the worm screw and take off the plastic knob. Put it back so that the worm screw must be next to the stop while the valve is closed. Then tighten the worm screw again.
4. Turn the machine on and test the down-feed control.

4.14. Cooling agents and chips disposal

The quality of the cooling agent will deteriorate due to:	If the solution is too weak:	If the solution is too strong:
• use of contaminated water • impurity • outside oil contamination (hydraulics, gears) • high operating temperatures • lack of air circulation • wrong concentration	• corrosion protection is diminished • lubrication decreases • microbial attack is more likely	• the cooling ability is decreased • foam behaviour increases • emulsions stability deteriorates • sticky residue develops

4.14.1. Coolant device inspection

The state of the cooling agent has significant influence on the cutting quality and on the operational life of the machine. Lifetime of the cooling liquid is 1 year, after this time we recommend change the cooling liquid. This time is dependent on the degree of pollution cooling liquid (especially with oils) and on the other factors.

Check level of the cooling liquid and function of the pump periodically!

Note:
If the state of the cooling liquid is not satisfactory, the cooling liquid must be changed.

Check the state of the cooling agent according to the following table:

Testing	Interval	Method	Condition	Precaution
Liquid level	daily	visually	too low	after concentration check, refill with water or emulsion
Concentration	daily	refractometer densimeter	too high too low	refill water refill base emulsion
Smell	daily	by sense of smell	unpleasant smell	good ventilation, add biocides or renew coolant
Contamination	daily	by sense of smell	visible oil leaks, sludge fungi	surface cleaning, fix leaks, add biocides or fungicides, or coolant renewal after added system cleanser*
Corrosion-protection	when necessary	visually chip test Herbert-test	insufficient corrosion protection	test stability, if necessary – increase concentration or pH value
Stability	when necessary	refractometer	oiling	add concentrate, enquiries to supplier
Foam reaction	when necessary	shaking test	too much foam, foam disperses too slowly	avoid aeration, increase water hardness, ix with defoamer

* According to manufacturers' instructions

4.14.2. Chips disposal

Chips resulting from cutting operations must be disposed of in accordance with the relevant regulations.

- Let the chips drip excess fluid!.
- Fill a watertight container with the chips! Be careful that the container does not leak, because even after a long dripping time, they still contain coolant residue.
- *Place the container into the care of a disposal company equipped for the disposal of chips contaminated with cooling liquid.* In case the machine is equipped with micro-spray installation, the chips must also be handed over to a disposal company.

4.15. Hydraulic, Greases and oils

4.15.1. Gearbox oils

In gearboxes, oil is used for the whole lifetime of the gearbox. We recommend replacing of the filling oil in case of repair.

Use oils with specification DIN 51517 in the gearboxes. Select the viscosity grade ISO VG according to the original oil fill.

Attention:
When replacing, use oils recommended by BOMAR or oils, which has comparable parameters from the other manufacturers.
Do not forget, that mineral and synthetic oils must not be mixed!

Recommended oils and quantity according to the type of the band saw

Band saw	Gearbox oil	Capacity
Transverse 610.440 DGH	Shell Tivela S 320	1,8 l
Swarf conveyor	Shell Tivela S 320	0,075 l

Comparative table of the gearbox oils

Manufacturer	Viscosity grade		
	ISO VG 100	ISO VG 220	ISO VG 320
BP	Energol GR-XP 100	Energol GR-XP 220	Energol GR-XP 320
Castrol	Alpha SP 100 Alpha MW 100	Alpha SP 220 Alpha MW 220	
Elf	Reductelf SP 100	Reductelf SP 220 Reductelf Synthese 220	Reductelf SP 320
Esso	Spartan EP 100	Spartan EP 220	Spartan EP 320
Mobil	Mobilgear 627	Mobilgear SHC 220 Mobilgear 630	Mobilgear 632
ÖMV		PG 220	
Paramo	PP 7	Paramo CLP 220	Paramo CLP 320
Shell	Shell Omala 100	Shell Omala 220 Shell Tivela S 220	Shell Omala 320 Shell Tivela S 320
Total	Carter EP 100	Carter EP 220	Carter EP 320

4.15.2. Lubricant greases

We recommend using lithium based saponified grease, class NGLI-2 for lubrication. Different greases are mixable, if their oil bases and consistence type are identical.

Comparative table of the lubricant greases:

Manufacturer	Type of the lubricant grease
BP	Energrease LS - EP
DEA	Paragon EP1
Esso	FETT EGL 3144
	Beacon EP 1
	Beacon EP 2
FINA	FINA LICAL M12
Klüber	Microlube GB0
	Staburags NBU8EP
	Isoflex Spezial
Optimol	Optimol Longtime PD 0, PD1, PD2
Shell Aseol AG	ASEOL Litea EP 806-077
Texaco	Multifak EP1

4.15.3. Lubrication

There are several placing on the machine, which are necessary to grease periodically. It secures the right function of the machine.

Lubrication place	Lubrication
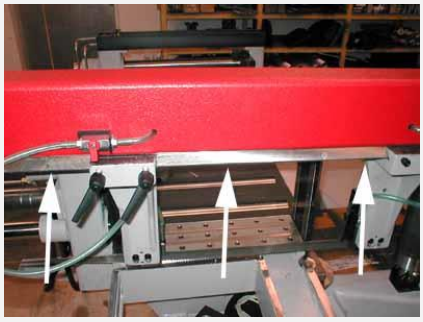	The guiding cubes leading – grease with oil from both sides once a week.

4.15.4. Hydraulic oils

Replace the hydraulic oil once a year, because the oil can deteriorate its properties and cause problems the hydraulic equipment. If the hydraulic system is equipped with filter (2SF 56/48-0,063), replace the filter too.

Use oils with specification DIN 51524-HLP, ISO 6743-4 and viscosity grade ISO VG 32 in hydraulic aggregates. Hydraulic oils quantity – see chapter **Hydraulic oil level check**.

Note:
When replacing, use oils recommended by BOMAR or oils, which has comparable parameters from the other manufacturers. Do not forget, that mineral and synthetic oils may not be mixed!

Comparative table of the hydraulic oils

Manufacturer	Type	Manufacturer	Type
Agip	Oso 32	Ina	Hidraol 32 HD
Aral	Vitam GF 32	Klüber	Lamora HLP 32
Avia	Avilub RSL 32	Hungary	Hidrokomol P 32
Benzina	OH-HM 32	Mobil	Mobil DTE 25
BP	Energol HLP 32	ÖMV	HLP 32
Bulgaria	MX-M/32	Poland	Hydrol 30
Castrol	Hyspin AWS 32	Rumania	H 32 EP
Čepro	Mogul HM 32	Russia	IGP 30
DEA	Astron HLP 4hy6	Shell	Tellus Oil 32
Elf	Elfolna 32	Sun	Sunvis 846 WR
Esso	Nuto H 32	Texaco	Rando HD B 32
Fam	HD 5040	Valvoline	Ultramax AW 32
Fina	Hydran 32		

4.15.5. Hydraulic unit service

After 50 hours working time, or the latest 3 month after the first run, the first service should be carried out. This includes:

- checking off all screws and connections, fixing points, tubes and hoses for leakage
- Cheb hydraulic oil level
- During time of duty the oil temperature shouldn´t exceed 60-70°C
- check function of signaling components (thermometer, level gauge, dirty filter indicator)
- Check the adjustment of working pressure

To realise a high reliability of the power pack, the manufacturer lays down following inspection intervals

Interval	daily	weekly	monthly	three monthly	six monthly	annually
Hydraulic fluid						
Level	-	•	-	-	-	-
Temperature	-	•	-	-	-	-
Condition	-	-	•	-	-	-
Change interval	-	-	-	-	-	•
Filter						
Change interval	-	-	-	-	-	-
Other checks						
External Leakages	•	-	-	-	-	-
Contamination	•	-	-	-	-	-
Damages	•	•	-	-	-	-
Noise-(level)	•	-	-	-	-	-
Gauges	-	-	•	-	-	-

4.15.6. Hydraulic oil level check

Pull up the gauge and check the state of the oil. The oil level must be situated between water-glas.

Fill the hydraulic oil, if it is necessary. Use always the filter (10 µm or better) when you fill the oil. You avoid impurities penetration to the hydraulic system and troubles in hydraulic system.

4.16. Machine cleaning

Clean the machine from the cooling liquid and impurities after every shift stopping. Conserve the guiding surfaces, mainly.

- Clamping jaws guiding of the vice.
- The guiding of the feeder.
- Loading surface of the vice.

•

4.17. Worn pieces replacement

4.17.1. Hard metal guides replacement

If the hard metal guides cannot be adjusted, they have to be replaced.

1. Remove the hosepipe leading to the cooling agent and dismantle saw band and saw band guiding cube.

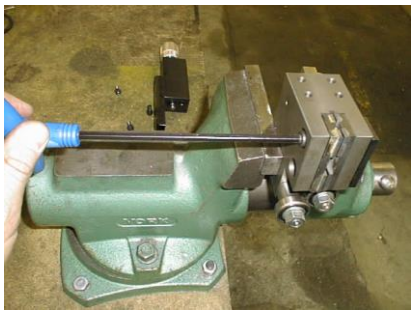

2. Fasten the guiding cube to the vice. Release clamping screws of both hard metal guides and remove them.

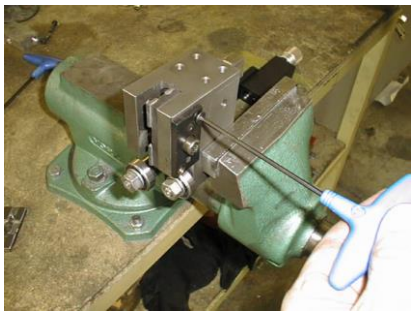

3. Screw out the adjusting screw of the adjustable hard metal guide.

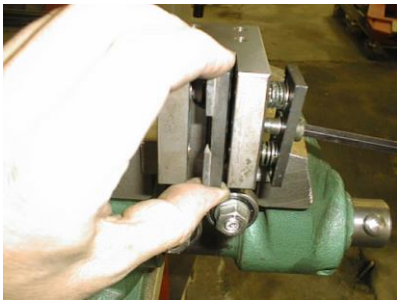

4. Screw out the adjusting screw of the adjustable guide as far from the guiding cube so that it is not possible to see it from the inner side.

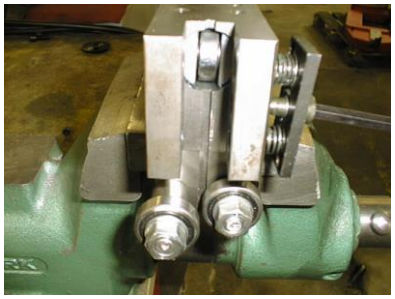

5. Remove the adjustable guide.

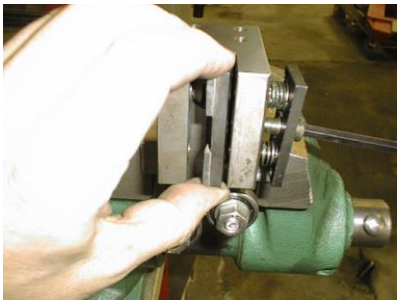

6. Insert new hard metal guides and screw on them.

7. Install the cube on the holder and connect the cooling.
8. Adjust hard metal guides.

4.17.2. Pushing bearing replacement

If it is impossible to adjust the bundle gripping assembly and the pushing bearing is worn, it needs to be replaced.

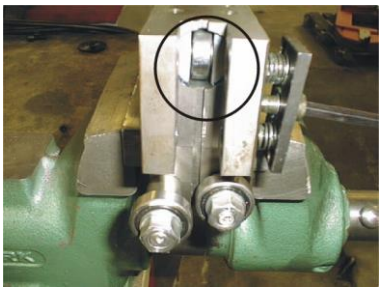


The bearing condition is possible discover, on the cube from the bottom side, for a better inspection is possible put out the holder of the bearing from the cube.

If the bearing is worn, there is a visible channel on it.

Bearing replacement

Disconnect the hosepipe from the cooling agent supply, screw off the cutting pressure regulation. The gripping assembly regulation should stay connected to the hydraulic system. Dismantle the guiding cube of the saw band.

1. Fasten the guiding cube to the vice by means of the wrench no.3, release fixative screw of the bearing holder.

2. Take out the bearing holder from the guiding cube.

3. Insert the pivot to the vice.

Attention:
The vice has aluminium jaws, eventually, there has to be an aluminium agent to protect the pivot from damage.

4. Remove the bearing pivot from the bearing holder by means of the swager.

5. Check all parts and remove the worn ones.

6. Fasten the holder to the vice.

Attention:
The vice has aluminium jaws, eventually, there has to be an aluminium agent to protect the pivot from damage.

7. Insert the bearing and washers and return the pivot to its original place.
8. The pivot may not extend past the holder, otherwise, the bundle gripping assembly regulator gets worse.

9. Insert the holder to the guiding cube and fasten it by means of the screw and wrench.

10. Install the cube on the holder of the guiding cube, fasten cutting pressure regulation and connect cooling distribution.
11. Set the guiding cube, hard metal guides and cutting pressure regulation.

4.17.3. Saw band guiding pulleys replacement

If the saw band is not sufficiently guided by guiding pulleys or if the pulleys are obviously worn, the pulleys should be replaced.

Attention:
Guiding pulleys must be replaced together on both guiding cubes!

1. Dismantle the saw band.
2. Disconnect the hosepipe from the cooling agent input, screw off the cutting pressure regulation.
3. The gripping assembly regulation should stay connected to the hydraulic system.
4. Dismantle the guiding cube of the saw band.

5. Tighten the guiding cube to the vice and dismantle both eccentrics with bearings following way.
6. Screw off nuts from the eccentric by means of the wrench no.14 and wrench no.16.

7. Remove the washers from the eccentrics.


8. Remove eccentrics from the bearings by means of the swager.


9. Pull up the eccentrics from the cube.

10. Change both bearings and other worn parts.

11. Install eccentrics to the cubes.
12. Insert washer on the shorter eccentric and insert ring on the longer eccentric. Further add both eccentrics of bearings and attach them to the eccentrics with the help of a pipe.

Attention:
Do not forget the eccentrics' position in the cube.

13. Shorter eccentric is located on the side of binding screws of the guide cube.

14. Put the washers on the bearings.

15. Screw on the securing nuts on the eccentrics by means of the two wrenches.

16. Insert piece of the saw band to the guiding cube (c. 15 – 20cm).

17. Set the eccentrics by means of the wrenches, the saw band must run in the centre. Guide pulleys must not press too much on the band, but must spin freely during the band run.

    Optimal distance between the band and the pulley is 0,05 mm.

18. Remove the testing piece of saw band from the guide cube and attach the guide cube on the machine; adjust it.

4.17.4. Round brush replacement

If the chip removing brush is not able to fulfil its function, it has to be replaced

1. Hold shaft of the brush by wrench

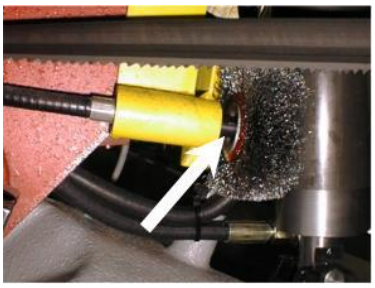

2. Release the nut on the brush, replace worn brush on the new brush, screw on the nut

3. Set the brush to the saw band

4.17.5. Stretching wheel replacement

1. Dismantle the saw band.

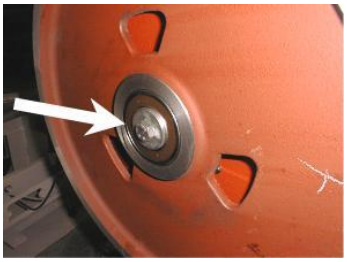

2. Screw off the screw and take down the washer.

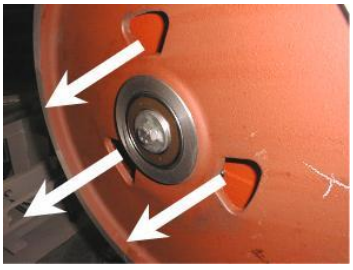

3. Pull off the wheel from the shaft by means of the three-armed puller. If bearing stayed on the shaft, pull off it too

4. Check score of the bearings of the stretching wheel and replace them for new.

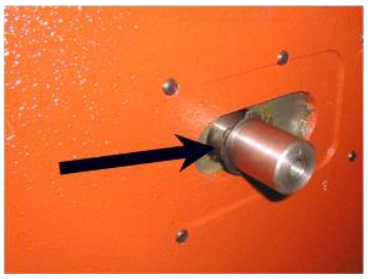

5. Clean the shaft and grease it with oil. Insert retaining ring to the groove.

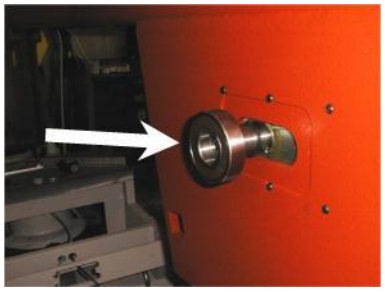

6. Install bearing on the shaft and move it to the retaining ring. Insert the distance ring on the shaft and move it to the bearing.

7. Insert the retaining ring to the hole in the wheel.

8. Insert the bearing to the hole in the wheel and press it to the retaining ring.

9. Put the wheel on the shaft and screw on the preparation to the wheel stretching to the hole in the shaft.

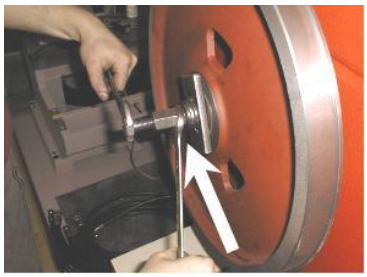

10. Pull on the wheel on the shaft.

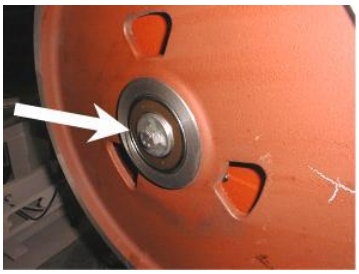

11. Screw on washer and screw back..
12. Install the saw band. Wheel replacement is ready.

4.17.6. Driving wheel replacement

1. Dismantle the saw band

2. Screw off the screw and remove the washer.

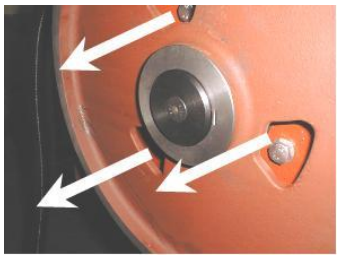

3. Pull off the wheel from the shaft by means of the three-armed puller.

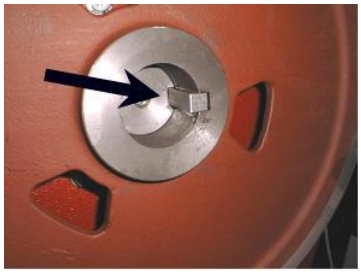

4. Install the wheel on the shaft. Insert the feather to the groove.

5. Screw on the preparation to the wheel stretching to the hole in the shaft. Pull on the wheel on the shaft.

6. Screw on washer and screw back.
7. Install the saw band. Wheel replacement is ready

4.17.7. Cooling pump replacement

Attention:
Only a qualified worker can carry out the connection!!
High-voltage shock may have fatal results.
Further instructions are needed for qualified personnel!
Do not do the work yourself!!!

- The tank with cooling agent is fastened to the pedestal by screws
- Screw off the screws and remove the tank from the pedestal
- Remove the hosepipe leading to the cooling agent from the plug on the pump
- Unscrew four screws on the cooling pump flange and pull out the pump from the sheet metal holder
- Remove the pump clamp box cover. Disconnect 4 clamps of the input cables
- Loosen the bushing and pull the cable out of the pump
- Dismantle new pump clamp box cover
- Push the cable through the bushing and fasten it
- Connect the cable clamps on the pump clamps as is described in the previous case

- Install again the clamp box cover; do not forget the rubber gasket
- Seal the hosepipe leading to the cooling agent connection
- Put the pump on the sheet metal holder and secure it to the pedestal with the four screws

5. Závady / Troubleshooting

5.1. Mechanical problems

Problem	Possible causes	Repair
1. Slanting cut	- Wrongly adjusted hard metal guides.	Set according to the chapter „Servicing and adjustment“
	- Worn hard metal guides.	Replace to the chapter „Worn pieces replacement“
	- Wrongly adjusted cubes of the saw band guiding.	Set according to the chapter „Servicing and adjustment“
	- Worn bearings of the saw band guiding.	Replace according to the chapter „Worn pieces replacement“
	- Wrongly adjusted swarf brush.	Set according to the chapter „Servicing and adjustment“
	- Worn swarf brush.	Replace according to the chapter „Worn pieces replacement“
	- Insufficient saw band stretching.	Rise the saw band stretching and set the limit switch.
	- Wrongly chosen tooth system of the saw band.	Replace the saw band and keep the instructions of manufacturer on new saw band choice.
	- Worn saw band.	Replace the saw band.
	- Wrongly balanced roller conveyor.	Set the roller conveyor.
	- Dirty feeding board.	Cleanse the feeding board from debris, chip and residue material.
	- Guiding arm and guiding cube are loosened.	Clamp the guiding arm.
	- Guiding arm and cube are too far from the material.	Set the guiding cube to the material.
	- Too fast cutting rate.	Lower the material feeding speed.
	- Unexpected oscillation in material quality.	Set the cut and feeding speed to the relevant material.
2. The cut is not cut upon desired angle	- Securing lever is loosened.	Check the securing lever efficiency and carry out its adjustment according to chapter „Servicing and adjustment“.
	- Set angle does not match the cut angle.	Check the angle adjustment with a protractor and possibly set it according to chapter „Servicing and adjustment“.
	- Insufficient saw band stretching.	Stretch the saw band and set the limit switch according to chapter „Servicing and adjustment“.
	- Guiding arm and guiding cube are loosened.	Fasten the guiding arm and the cube.
	- Dirt between material and clamping jaw.	Cleanse the material and mating jaw.
3. Short lifetime of the saw band	- Insufficient saw band stretching.	Raise the tightening of the saw band set the scanner of saw band tightening according to chapter „Servicing and adjustment“.
	- Worn swarf brush.	Check the swarf brush condition and replace it in case of excessive use as described in chapter „Worn pieces replacement“
	- Wrongly adjusted swarf brush.	Check swarf brush adjustment, set it according to chapter „Servicing and adjustment“
	- Over stretched saw band	Lower stretching of the saw band and set the limit switch of the saw band stretching according to chapter „Servicing and adjustment“
	- Wrongly adjusted hard metal guides.	Check the adjustment of the hard metal guides and carry out adjustment as described in chapter „Servicing and adjustment“
	- Worn hard metal guides of the saw band.	Check the condition of the hard metal guide and if it is too worn, replace hard metal guides according to chapter „Worn pieces replacement“

Problem	Possible causes	Repair
	- Worn saw band guide bearings.	Check guiding bearings and if you notice some sort of excessive damage, replace them according to chapter„Worn pieces replacement“
	- Wrongly adjusted guiding cubes of the saw band.	Set guiding cube according to chapter „Servicing and adjustment“
	- Wrongly adjusted down feed and saw band speed.	Adjust the feeding and speed of a saw band according to values published by saw band manufacturer.
	- Different material quality.	Adjust feeding and speed of a saw band according to desired material (try cut-test).
	- Low-class saw band	Replace the saw band (contact your local accessory supplier for more information)
	- Wrongly chosen saw band tooth system.	Replace the saw band and keep instructions of the manufacturer on the choice.
	- Wrongly adjusted tracking.	Check the space between top of a saw band and driving wheel. Perhaps adjust the tracking as described in chapter „Servicing and adjustment“
4. Insufficient cut output.	- Worn saw band.	Replace the saw band and keep instructions of the manufacturer on the choice.
	- Wrong saw band tooth system.	Replace the saw band and keep instructions of the manufacturer on the choice.
	- Wrongly set down feed and speed of a saw band.	Set feed and speed of a saw band according to values published by saw band manufacturer.
5. The cut is not finished.	- Wrongly adjusted lower stop point of the saw frame.	Check lower limit switch and screw.
	- Stop point surface is messed-up.	Cleanse stop point surface of the limit switch from debris and residue material.
6. By choke is not possible turn	- Metal clamps between valve and panel.	Clamps must be removed and put on the shaft O-Ring about 10x2 mm.
	- Metal clams are in body of valve.	Valve must be cleared or changed.
7. Saw band drive cannot be started.	- Pressure switch is adjusted wrong.	Set the pressure switch according to chapter „Servicing and adjustment“
	- Pressure switch is defective.	Replace defective parts of the pressure switch.
8. The saw bands are cracked.	- In stretching wheel is wrong adjusting geometry.	Adjust distance band from recess wheel c.2 mm according to operating instructions.
	- Hard metal plates of circuit saw band are not adjusting.	Hard metal plates of circuit saw band must be adjusting according to operating instructions.
	- Guiding cubes are not adjusting (bearings + hard metal circuit)	Guiding cubes must be adjusting (bearings + hard metal circuit) according to operating instructions.
	- Bearings of guiding cubes are used (rolling elements are damaged or outside ring of bearing has conical form).	Bearings of guiding cubes must be replaced. Bearings must be adjusting according to operating instructions.
9. Damage tooth system of the saw band	- In gripping the lifting cylinder is backlash.	
	- Squeezed pin upper or downer holder of the lifting cylinder.	Exchange complete upper or downer holder of lifting cylinder.
10. The saw is cut downing.	- Geometry of hardmetal guiding cubes is wrong adjusted.	Hardmetal guiding cubes must be adjusted.
	- Bearings of guiding cubes are used.	Bearings of guiding cubes must be replaced.
11. Cleansing of the saw band is not functional.	- Elastic wheel of the brush drive is worn-down.	Elastic wheel of the brush must be changed.
	- Knurling of the driving wheel is worn-down.	Driving wheel must be changed.
	- The shaft of the brush drive is rusted.	The shaft of the brush must be cleaned and oiled.

Problem	Possible causes	Repair
	- The brush position and the brush cover is adjusted wrong – with the brush cannot be turned.	The brush cover must be posed, in order to the brush can be turned.
12. The saw arm periodically rise and fall during the cut; this cause short lifetime of the saw band.	- Backslash in driving wheel lodgement on the shaft.	Change the driving shaft for a long one, new bearings, distance ring, new driving wheel, spring, two covers on the forehead of the shaft + screws.
	- Worn channel for spring.	

5.2. Electric and hydraulic problems

Problem	Possible causes	Repair
1. Machine is not possible start.	- In socket is not voltage	Line voltage must be checked.
	- Transfer relay is closed (thermal protector)	Each FA relay must be checked.
	- Limit switch of saw band stretching, cover of frame or cover of saw band is not started.	Check of saw band stretching and covers closing.
2. When cut is finished, the frame is not raising.	- Bottom limit switch is adjusted wrong.	Bottom limit switch must be adjusted according to chapter ADJUSTING.
	- In hydraulic (pneumatic) ring is error. HYTOS (BOSCH) is not acting to frame uplift.	Function of magnetic valve must be checked, valve must be closed, voltage of clamps and inductor must be checked.
3. Electric motor and pump are without voltage. Between contactor and thermal protector is not voltage.	- Wrong contactor.	Replace contactor of engine.
4. The indicator of speed saw band is not functional.	- Sensor of speed is not adjusted.	Sensor of speed must be adjusted.
	- Defective display	The display must be changed.
	- Wrong sensor – diode of indicator speed is not light.	Sensor must be changed and adjusted.
5. Protector is switched off from engine hydraulic aggregate MA3 sometimes.	- Into hydraulic system is high working pressure.	Service engineer must reduce the pressure in hydraulic system.
6. The hydraulic aggregate cannot be started	Auxiliary contact on thermo-relay FA1 is defective.	Replace the defective contact on motor starter FA1.
7. Hydraulic aggregate is switched on but the saw arm or the main vice is not functional	- Wrong connection of electrical supply. The electrical phases are connected conversely.	The phases must be switched. Only service engineer can do this.
8. Cooling is not active	Lack of cooling agent.	Fill the tank with cooling agent.
	- Thermal relay is defective	Change the thermal relay
	- Input hosepipe is broken or obstructed.	Check the cooling circuit and perhaps cleanse cooling system.
	- Cooling pump protection is defective	Check the protection of cooling pump if need change it.
	- Cooling pump is defective.	Replace the cooling pump.

5.3. Hydraulic problems

Problem	Possible causes	Repair
1. Hydrogenerator not supplying oil	• reverse rotation	Check the connections of each phase. Reconnect properly connection of the electrical phases.
	• shortage of oil in the tank	Add hydraulic oil
	• Oil viscosity does not correspond prescribed viscosity value	Change hydraulic oil.
	• Hydrogenerator malfunction	Call service
	• Wrong power supply connection.	Check the connections of each phase. Reconnect properly connection of the electrical phases.
2. Hydraulic oil contains bubbles	• Hydraulic circuit is not adequately deaerated	Make deaeration of hydraulic circuit.
	• Low oil level	Add hydraulic oil
	• the pump shaft seals damaged	Call service
3. Increased mechanical noise	• damaged joint drive	Call service
	• damaged or destroyed motor bearings	Call service
	• air intake	Check for leaks.
4. Low pressure, pump supplies oil	• problem in the safety valve	Wrong settings. Check the settings and adjust the safety valve.
	• pump wear	Call service
	• external or internal leakage	Call service
5. Hydrogenerator is seized	• damage by solid particles in oil	Make oil filtration, or call the service.
	• non-prescribed oil	Change hydraulic oil.
	• wrong type of oil	Change hydraulic oil.
	• exceeding the life of the pump	Call service
6. Overheating oil	• cooler malfunction	Check the cooler function or call service.
	• wear the pump, the energy is converted into heat	Call service
7. Hydraulic valve can not be readjusted	• electromagnet has no signal (voltage) - interrupted supply lines	Check again.
	• Electromagnet coil burnt	Replace coil – Call service.
	• spool valve sticking	Replace valve – Call service

6. Schémata / Schemas / Schematics

6.1. Elektrické schema /Elektroschema / Electric scheme

6.1.1. 3×400 V+PE(+N), 50 Hz

Obsah / Table of contents / Inhalt

Kusovník artiklů / Parts list / Stückliste

Označení přístroje Device identification Geräteidentifikation	Typ přístroje Device description Gerätebeschreibung	Objednací číslo Type number Typennummer	Výrobce Manufacturer Hersteller	Skladové číslo Part number Lagernummer	Množství Quantity Menge	Umístění Location Stelle
-ZD1	Napájecí zdroj - 15VAC/24VDC; 20VAC/28VDC Power supply unit - 15VAC/24VDC; 20VAC/28VDC Netzteil - 15VAC/24VDC; 20VAC/28VDC	ZDR-03	Bomar	265.915	1	/9.2
-BM1	Bezpečnostní relé 24VDC, 3NO Safety relay 24VDC, 3NO Sicherheitsrelais 24VDC, 3NO	BT50	ABB	91.051.063	1	/14.5
-CU1	Klávesnice - fóliová Touch-sensitive keyboard Folientastatur	31.R230-207	AKI ELECTRONIC,spol.s.r.o.	31.R230-207	1	/15.0
-SN1	Snímač výšky ramene Arm height sensor Arm Höhensensor	DHB	ASTP	251.232	1	/12.8
-FU1	Pojistka trubičková - 2A/250V, pomalá, 5x20 Tube fuse - 2A/250V, slow, 5x20 Rohrsicherung - 2A / 250V, langsam, 5x20	T2A/250V	ESKA	91.230.001	1	/9.1
-FU2	Pojistka trubičková - 2A/250V, pomalá, 5x20 Tube fuse - 2A/250V, slow, 5x20 Rohrsicherung - 2A / 250V, langsam, 5x20	T2A/250V	ESKA	91.230.001	1	/9.1
-FU3	Pojistka trubičková - 500mA/250V, pomalá, 5x20 Tube fuse - 500mA/250V, slow, 5x20 Rohrsicherung - 500 mA / 250 V, langsam, 5x20	T500mA/250V	ESKA	91.230.011	1	/9.4
-FU7	Pojistka trubičková - 6,3A/250V, pomalá, 5x20 Tube fuse - 6,3A/250V, slow, 5x20 Rohrsicherung - T6,3A / 250V, langsam, 5x20	T6,3A/250V	ESKA	91.230.002	1	/9.4
-RP1	Potenciometr 4k7 Potenciometer 4k7 Potentiometer 4k7	TP195 4k7/N20A	Elektronické součástky CZ, a.s	91.283.015	1	/8.8
-RP1	Hlavice potenciometru - 24mm Head of potentiometer 24mm Leiter Potentiometer 24mm	S8877 BLK	GES-ELECTRONICS, a.s.	91.060.063	1	/8.8
-RCF1	Filtr RFC vývodový Efferent RFC filter Ableitenden RFC Filter	FBOPR1624	Ing. Miroslav Vlček	91.041.015	1	/7.3
-RCF2	Filtr RFC vývodový Efferent RFC filter Ableitenden RFC Filter	FBOPR1624	Ing. Miroslav Vlček	91.041.015	1	/8.0

The manufacturer reserves right to use an equivalent replacement device.

2

BOMAR, s.r.o.
Těžební 1236/1
CZ 627 00, Brno

Stroj/Machine/Maschine: Transverse 610.440 (D)GH

Název stránky/Name page/Name seiten: Kusovník artiklů / Parts list / Artikelstückliste

Číslo dok./Doc.No/Anzahl der Dokumente.:	ES-18050-201/202-V6.7	List/Page/Seite: 3
Napájení/Power supply/Einspeisung:	3x400V+PE, 50Hz	
Zpracoval/Processed /Hat verarbeitet:	Kostka	Listů/Pages/Seiten: 22
Datum/Date/Datum:	13.5.2016	

Kusovník artiklů / Parts list / Stückliste

Označení přístroje Device identification Geräteidentifikation	Typ přístroje Device description Gerätebeschreibung	Objednací číslo Type number Typennummer	Výrobce Manufacturer Hersteller	Skladové číslo Part number Lagernummer	Množství Quantity Menge	Umístění Location Stelle
-RCF11	Filtr RFC vývodový Efferent RFC filter Ableitenden RFC Filter	FBOPR1624	Ing. Miroslav Vlček	91.041.015	1	/7.6
-RCF12	Filtr RFC vývodový Efferent RFC filter Ableitenden RFC Filter	FBOPR1624	Ing. Miroslav Vlček	91.041.015	1	/7.8
-FA1	Motorový spouštěč 0,16A Motor starter 0,16A Motorstarter 0,16	MS116-0,16A	ABB	91.045.015	1	/7.4
-FA1	Pomocné kontakty - 1xNO+1xNC Auxiliary contacts - 1xNO+1xNC Hilfskontakte - 1xNO+1xNC	HKF1-11	ABB	91.046.002	1	/7.4
-FA2	Motorový spouštěč - 1A Motor starter - 1A Motorstarter - 1A	MS116-1,00	ABB	91.045.019	1	/8.1
-FA2	Pomocné kontakty - 1xNO+1xNC Auxiliary contacts - 1xNO+1xNC Hilfskontakte - 1xNO+1xNC	HKF1-11	ABB	91.046.002	1	/8.1
-FU1	Svorka pojistková Fuse terminal Sicherungsklemme	WK4/THSi5U	WIELAND	91.251.102	1	/9.1
-FU2	Svorka pojistková Fuse terminal Sicherungsklemme	WK4/THSi5U	WIELAND	91.251.102	1	/9.1
-FU3	Svorka pojistková Fuse terminal Sicherungsklemme	WK4/THSi5U	WIELAND	91.251.102	1	/9.4
-FU4	Svorka pojistková Fuse terminal Sicherungsklemme	WK4/THSi5U	WIELAND	91.251.102	1	/9.4
-FU4	Pojistka trubičková - 800mA/250V, pomalá, 5x20 Tube fuse - 800A/250V, slow, 5x20 Rohrsicherung - 800A / 250V, langsam, 5x20	T800mA/250V	ESKA	91.230.010	1	/9.4
-FU5	Svorka pojistková Fuse terminal Sicherungsklemme	WK4/THSi5U	WIELAND	91.251.102	1	/9.4

The manufacturer reserves right to use an equivalent replacement device.

Kusovník artiklů / Parts list / Stückliste

Označení přístroje Device identification Geräteidentifikation	Typ přístroje Device description Gerätebeschreibung	Objednací číslo Type number Typennummer	Výrobce Manufacturer Hersteller	Skladové číslo Part number Lagernummer	Množství Quantity Menge	Umístění Location Stelle
-FU5	Pojistka trubičková - 1A/250V, pomalá, 5x20 Tube fuse - 1A/250V, slow, 5x20 Rohrsicherung - 1A / 250V, langsam, 5x20	T1A/250V	ESKA	91.230.031	1	/9.4
-FU6	Svorka pojistková Fuse terminal Sicherungsklemme	WK4/THSi5U	WIELAND	91.251.102	1	/9.4
-FU6	Pojistka trubičková - 200mA/250V, pomalá, 5x20 Tube fuse - 200mA/250V, slow, 5x20 Rohrsicherung - 160mA / 250V, langsam, 5x20	T200mA/250V	ESKA	91.230.037	1	/9.4
-FU7	Svorka pojistková Fuse terminal Sicherungsklemme	WK4/THSi5U	WIELAND	91.251.102	1	/9.4
-FU8	Pojistka trubičková - 200mA/250V, pomalá, 5x20 Tube fuse - 200mA/250V, slow, 5x20 Rohrsicherung - 160mA / 250V, langsam, 5x20	T200mA/250V	ESKA	91.230.037	1	/16.1
-FU8	Svorka pojistková Fuse terminal Sicherungsklemme	WK4/THSi5U	WIELAND	91.251.102	1	/16.1
-FU9	Pojistka trubičková - 200mA/250V, pomalá, 5x20 Tube fuse - 200mA/250V, slow, 5x20 Rohrsicherung - 160mA / 250V, langsam, 5x20	T200mA/250V	ESKA	91.230.037	1	/16.9
-FU9	Svorka pojistková Fuse terminal Sicherungsklemme	WK4/THSi5U	WIELAND	91.251.102	1	/16.9
-HL1	Signálka zelená na adaptér Green light for Eaton adapter Grünes Licht für Eaton-Adapter	M22-LED-G	EATON	91.061.023	1	/10.4
-KM1	Ministýkač 4kW/400V Minicontactor 4kW/400V Minischutz 4kW/400V	B6S-30-01-1.7-71	ABB	91.040.049	1	/10.1
-KM2	Ministýkač 4kW/400V Minicontactor 4kW/400V Minischutz 4kW/400V	B6S-30-01-1.7-71	ABB	91.040.049	1	/10.3
-KM11	Ministýkač 4kW/400V Minicontactor 4kW/400V Minischutz 4kW/400V	B6S-30-01-1.7-71	ABB	91.040.049	1	/14.7

The manufacturer reserves right to use an equivalent replacement device.

3.a

Kusovník artiklů / Parts list / Stückliste

Označení přístroje Device identification Geräteidentifikation	Typ přístroje Device description Gerätebeschreibung	Objednací číslo Type number Typennummer	Výrobce Manufacturer Hersteller	Skladové číslo Part number Lagernummer	Množství Quantity Menge	Umístění Location Stelle
-KM11	Pomocné kontakty - 1xNO+1xNC Auxiliary contacts - 1xNO+1xNC Hilfskontakte - 1xNO+1xNC	CAF 6-11M	ABB	91.041.042	1	/14.7
-KM12	Ministýkač 4kW/400V Minicontactor 4kW/400V Minischutz 4kW/400V	B6S-30-01-1.7-71	ABB	91.040.049	1	/14.8
-KM12	Pomocné kontakty - 1xNO+1xNC Auxiliary contacts - 1xNO+1xNC Hilfskontakte - 1xNO+1xNC	CAF 6-11M	ABB	91.041.042	1	/14.8
-PA1	Pojistkový odpínač pro válcové vložky - 3P Switch fuse for the cylinder inserts - 3P Schalter Sicherung für den Zylindereinsätze - 3P	E 93/32	ABB	91.241.014	1	/8.4
-QS1	Rukojeť odpínače - černá Handle switch - black Griffschalter - schwarz	OHBS2RJ	ABB	91.180.015	1	/7.0
-QS1	Kryt svorek Terminal shroud Klemmenabdeckung	OTS40T3	ABB	91.170.017	1	/7.0
-RP1	Svorka rychloupínací Fastconnect clamp Fast Connect Klemm	WAGO 224-112	WAGO	91.250.009	3	/8.8
-SA1	Hlavice 3 polohového přepínače Head of 3 position switch Leiter der 3-Positionsschalter	M22-WRK3	EATON	91.060.051	1	/13.5
-SA1	Kontaktní blok - 1NO Contact block - 1NO Kontaktblock - 1NO	M22-K10	EATON	91.061.022	1	/13.5
-SA1	Upevňovací adaptér + 1NO Attaching adapter + 1NO Montageadapter + 1NO	M22-AK10	EATON	91.061.021	1	/13.5
-SA2	Hlavice tlačítka - černá Head button - black Kopftaste - schwarz	M22-D-S	EATON	91.060.035	1	/16.1
-SA2	Upevňovací adaptér + 1NO Attaching adapter + 1NO Montageadapter + 1NO	M22-AK10	EATON	91.061.021	1	/16.1

The manufacturer reserves right to use an equivalent replacement device.

3.b

Kusovník artiklů / Parts list / Stückliste

Označení přístroje Device identification Geräteidentifikation	Typ přístroje Device description Gerätebeschreibung	Objednací číslo Type number Typennummer	Výrobce Manufacturer Hersteller	Skladové číslo Part number Lagernummer	Množství Quantity Menge	Umístění Location Stelle
-SB1	Hlavice prosvětleného tlačítka zelená Green transparent switch Grün transparent Schalter	M22-DL-G	EATON	91.060.031	1	/13.3
-SB1	Upevňovací adaptér + 1NO Attaching adapter + 1NO Montageadapter + 1NO	M22-AK10	EATON	91.061.021	1	/13.3
-SB2	Upevňovací adaptér + 1NO Attaching adapter + 1NO Montageadapter + 1NO	M22-AK10	EATON	91.061.021	1	/13.4
-SB2	Hlavice tlačítka - černá Head button - black Kopftaste - schwarz	M22-D-S	EATON	91.060.035	1	/13.4
-SB3	Upevňovací adaptér + 1NO Attaching adapter + 1NO Montageadapter + 1NO	M22-AK10	EATON	91.061.021	1	/14.6
-SB3	Hlavice prosvětleného tlačítka žlutá Yellow trasparent switch Leiter beleuchtet gelbe Taste	M22-DL-Y	EATON	91.060.053	1	/14.6
-SB501	Total stop - hlavice + 3xNC Emergency-stop mushroom push - button + 3xNC Not-Aus-Pilz - Taster + 3 xNC	YW1B-V4E02R	IDEC	91.060.084	1	/14.4
-SB501	Kontakt - 1x NO Contact - 1x NO Kontakt - 1x NO	YW-E10	IDEC	91.061.044	1	/14.4
-TR1	Toroidal transformer - 0-230-400V/20V/15V, 150VA Toroidal transformer - 0-230-400V/20V/15V, 150VA Ringkerntransformator - 0-230V-400V/20V/15V, 150VA	400V/230V/20V/15V 6A/2A 150VA	KARBAN s.r.o.	91.080.026	1	/9.2
-SQ21	Bezpečnostní koncový spínač - 2xNC Safety Limit Switch - 2x NC Sicherheitsendschalter - 2x NC	QKS8	KEDU	91.173.012	1	/14.4
-PA1	Pojistka válcová - 12A, 10x38, rychlá Tube fuse - 12A, 10x38, fast Rohrsicherung - 12A, 10x38, schnell	PV10 12A gG	OEZ	91.231.007	1	/8.4
-SQ1	Koncový spínač - 1NC+1NO Limit switch - 1NC+1NO Endschalter - 1NC+1NO	D4N-4A31	OMRON	91.173.007	1	/12.2

The manufacturer reserves right to use an equivalent replacement device.

3.c

Kusovník artiklů / Parts list / Stückliste

Označení přístroje Device identification Geräteidentifikation	Typ přístroje Device description Gerätebeschreibung	Objednací číslo Type number Typennummer	Výrobce Manufacturer Hersteller	Skladové číslo Part number Lagernummer	Množství Quantity Menge	Umístění Location Stelle
-SQ2	Koncový spínač - 1NC+1NO Limit switch - 1NC+1NO Endschalter - 1NC+1NO	D4N-4A31	OMRON	91.173.007	1	/12.3
-FM1	Frekvenční měnič - 3.7kW, 3x400VAC Frequency converter - 3.7kW, 3x400VAC Frequenzumrichter - 3,7 kW, 3x400VAC	VFD037E43A	DELTA ELECTRONICS, INC.	91.012.094	1	/8.4
-QS1	3 pólový odpínač, 16A Disconnector - 3P, 16A Trennschalter - 3P, 16A	OT16FT3	ABB	91.170.018	1	/7.0
-CU1	Řídící obvod Control circuit Die Steuerschaltung	PRO-5.X	Bomar	91.995.221	1	/15.0
-RCF0	Vstupní odrušovací filtr 16A Input noise filter 16A Eingangsrauschfilter 16A	16EB15/50	WIDECOM TECHNOLOGY s.r.o.	91.041.062	1	/7.1
-M4	Ventilátor 24VDC, 154CFM Fan 24VDC, 154CFM Fan 24VDC, 154CFM	RDH1238 B2	Xinruilian Electronic Co.	91.015.126	1	/10.6

The manufacturer reserves right to use an equivalent replacement device.

3.d

Transverse 610.440 (D)GH

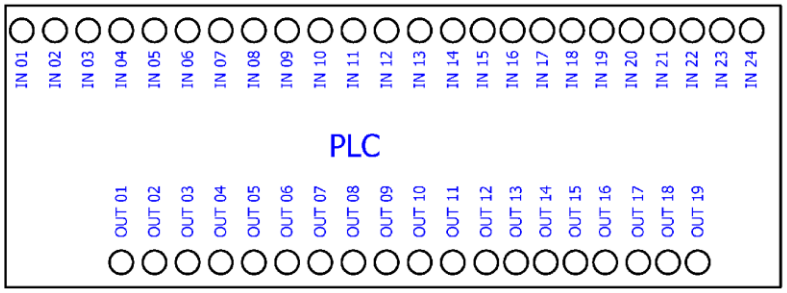

HW	
FW	

Pohled ze spodu/From under view/Blick nach

I/O	CZE	ENG	DE
IN 01	Svěrák upnut	Vice is clamped	Schraubstock ist gespannt
IN 02	Rameno dole	Arm is down	Rahmen ist unten
IN 03	NC	NC	NC
IN 04	Napnutí pásu	Blade tension	Bandspannung
IN 05	Motory OK	Motors OK	Motoren OK
IN 06	Bezpečnostní okruh uzavřen	Safety circle shut down	Sicherheitsschaltung gesperrt
IN 07	Tlačítko TOTAL STOP	Button TOTAL STOP	Taste TOTAL STOP
IN 08	Tlačítko START	Button START	Taste START
IN 09	Tlačítko STOP	Button STOP	Taste STOP
IN 10	MANUAL	MANUAL	MANUAL
IN 11	CYKLUS	CYCLE	ZYKLUS
IN 12	NC	NC	NC
IN 13	NC	NC	NC
IN 14	NC	NC	NC
IN 15	NC	NC	NC
IN 16	NC	NC	NC
IN 17	NC	NC	NC
IN 18	NC	NC	NC
IN 19	NC	NC	NC
IN 20	NC	NC	NC
IN 21	NC	NC	NC
IN 22	NC	NC	NC
IN 23	NC	NC	NC
IN 24	NC	NC	NC
OUT 01+ OUT 01-	Start FM1	Start FM1	Start FM1
OUT 02+ OUT 02-	Digitální ukazatel úhlu natočení ramene	Digital indicator rotation angle of the arm	Digitale Anzeige der Winkel des Arms
OUT 03+ OUT 03-	NC	NC	NC
OUT 04	Motor chlazení	Coolant pump	Motor Kühlung
OUT 05	Čerpadlo hydrauliky	Hydraulic pump	Hydraulikpumpe
OUT 06	NC	NC	NC
OUT 07	Svěrák upnout	Vice clamp	Schraubstock spannen
OUT 08	Svěrák povolit	Release vice	Schraubstock lösen
OUT 09	Rameno nahoru	Arm up	Rahmen nach oben
OUT 10	Rameno dolů	Arm down	Rahmen nach unten
OUT 11	Rameno rychle	Arm fast	Rahmen schnell
OUT 12	NC	NC	NC
OUT 13	Mikronizer	Microniser	Mikronizer
OUT 14	NC	NC	NC
OUT 15	NC	NC	NC
OUT 16	NC	NC	NC
OUT 17	NC	NC	NC
OUT 18	NC	NC	NC
OUT 19	Kontrolka start	Indicator start	Kontrollicht start

BOMAR, s.r.o.
Těžební 1236/1
CZ 627 00, Brno

Stroj/Machine/Maschine:
Transverse 610.440 (D)GH

Název stránky/Name page/Name seiten:
I/O řídící systém / I/O Control station / I/O Steuerung

Číslo výk./Doc.no/Anzahl der Dokumente:
ES-18050-201/202-V6.7

Napájení/Power supply/Einspeisung:
3x400V+PE, 50Hz

Zpracoval/Processed/Hat verarbeitet:
Kostka

Datum/Date/Datum:
31.10.2016

List/Page/Seite: 4
List/Pages/Seiten: 22

3.e

Schémata
Schemas
Schematics

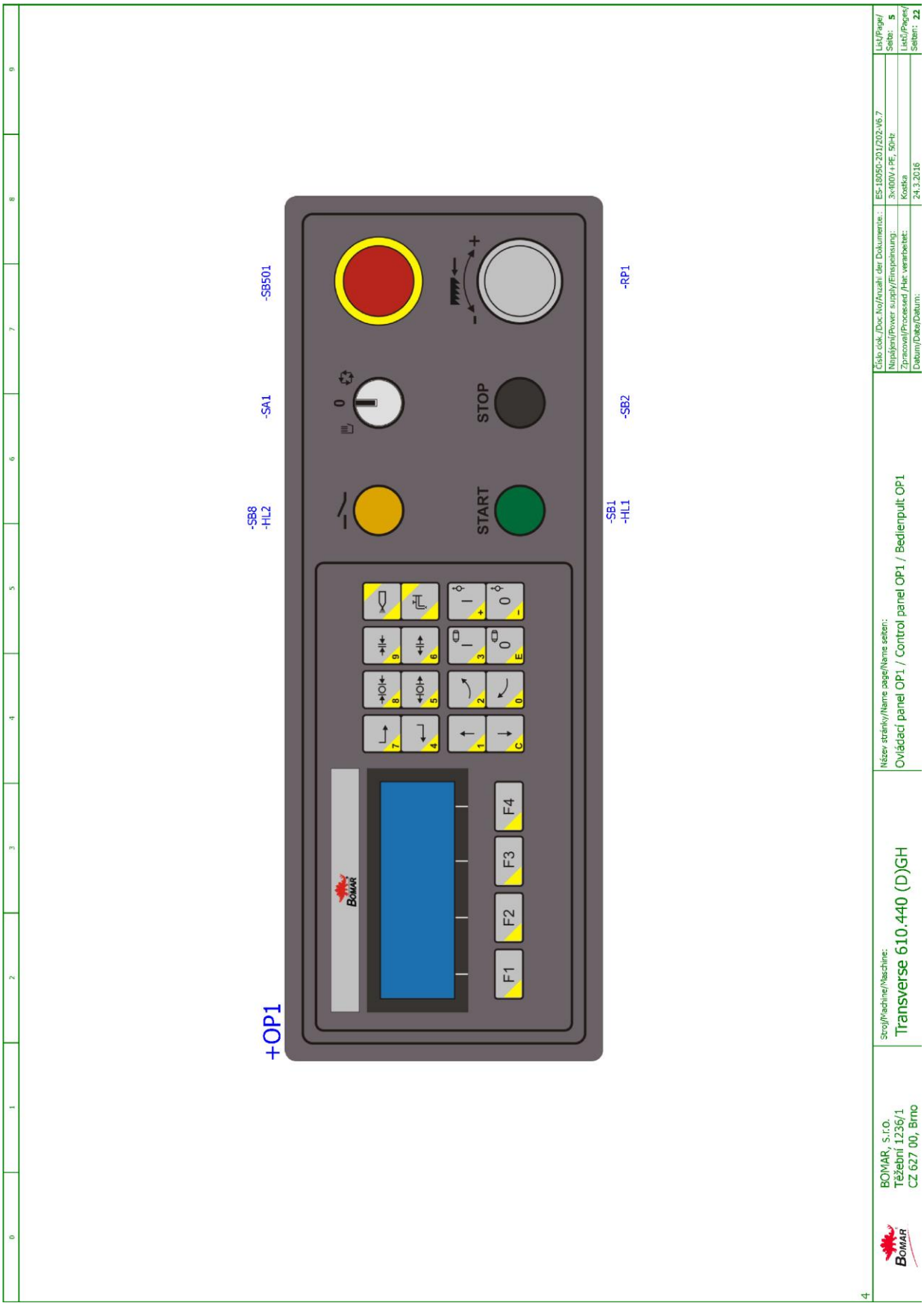
+OP1
-SB8
-HL2
-SA1
-SB501
-SB1
-HL1
-SB2
-RP1
START
STOP
F1
F2
F3
F4
BOMAR
BOMAR, s.r.o.
Těžební 1236/1
CZ 627 00, Brno
Stroj/Machine/Maschine:
Transverse 610.440 (D)GH
Název stránky/Name page/Name seiten:
Ovládací panel OP1 / Control panel OP1 / Bedienpult OP1
Číslo dok./Doc.No/Anzahl der Dokumente:
ES-18050-201/202-V6.7
Napájení/Power supply/Einspeisung:
3x400V+PE, 50Hz
Zpracoval/Processed /Hat verarbeitet:
Kostka
Datum/Date/Datum:
24.3.2016
List/Page/
Seite: 5
Listů/Pages/
Seiten: 22

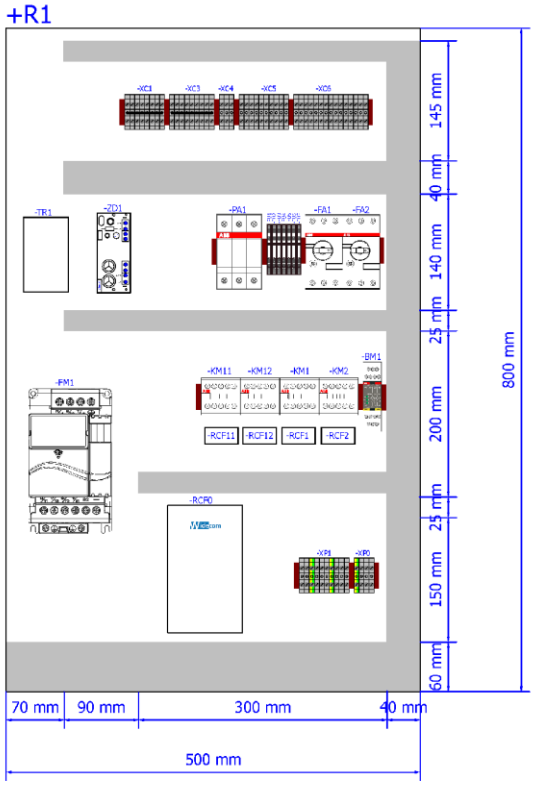

5

BOMAR, s.r.o. Těžební 1236/1 CZ 627 00, Brno	Stroj/Machine/Maschine: Transverse 610.440 (D)GH	Název stránky/Name page/Name seiten: Rozmístění prvků v rozvaděči R1 / Placement of elements in enclosure R1 / Platzierung der Elemente im Schaltschrank R1	Číslo dok./Doc.No/Anzahl der Dokumente.: ES-18050-201/202-V6.7 Napájení/Power supply/Einspeisung: 3x400V+PE, 50Hz Zpracoval/Processed /Hat verarbeitet: Kostka Datum/Date/Datum: 31.10.2016	List/Page/Seite: 6 Listů/Pages/Seiten: 22

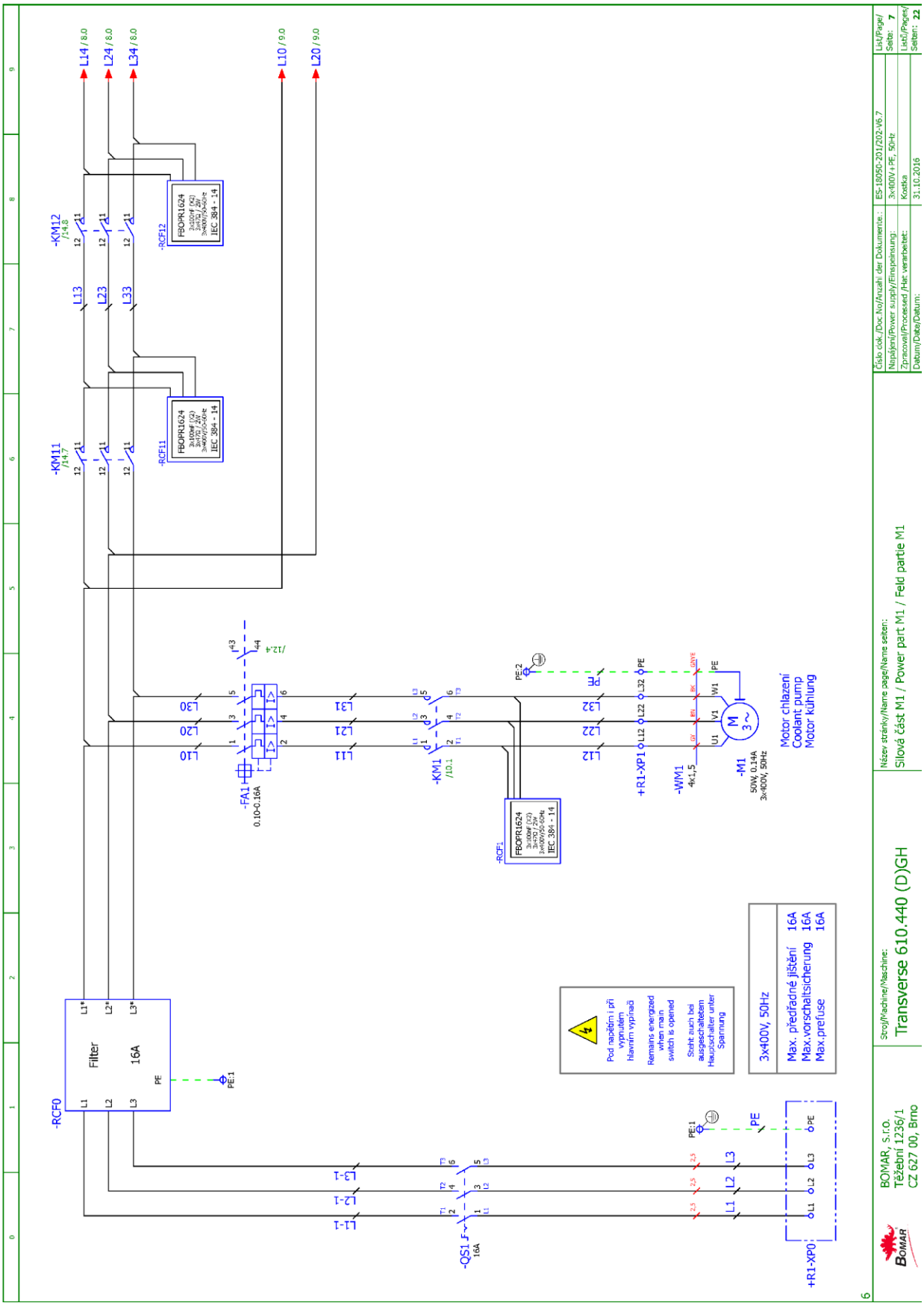
-RCF0
Filter
16A
PE
L1*
L2*
L3*
L1
L2
L3
PE:1
-QS1
16A
L1-1
L2-1
L3-1
+R1-XP0
PE
L1
L2
L3
PE:1
Pod napětím i při vypnutém hlavním vypínači
Remains energized when main switch is opened
Steht auch bei ausgeschaltetem Hauptschalter unter Spannung
3x400V, 50Hz
Max. předřadné jištění 16A
Max.vorschaltsicherung 16A
Max.prefuse 16A
-FA1
0.10-0.16A
/12.4
L10
L20
L30
L11
L21
L31
-KM1
/10.1
-RCF1
FBOPR1624
3x100W (X2)
3x470 / 2W
3x400V/50-60Hz
IEC 384 - 14
PE:2
PE
L12
L22
L32
+R1-XP1
-WM1
4x1,5
GN/YE
GY
BN
BK
U1
V1
W1
-M1
50W, 0.14A
3x400V, 50Hz
M
3~
Motor chlazení
Coolant pump
Motor kühlung
-RCF11
-RCF12
-KM11
/14.7
-KM12
/14.8
L13
L23
L33
L14 / 8.0
L24 / 8.0
L34 / 8.0
L10 / 9.0
L20 / 9.0
Číslo dok./Doc.No/Anzahl der Dokumente:
ES-18050-201/202-V6.7
List/Page/Seite: 7
Napájení/Power supply/Einspeisung:
3x400V+PE, 50Hz
Zpracoval/Processed /Hat verarbeitet:
Kostka
Listů/Pages/Seiten: 22
Datum/Date/Datum:
31.10.2016
Název stránky/Name page/Name seiten:
Silová část M1 / Power part M1 / Feld partie M1
Stroj/Machine/Maschine:
Transverse 610.440 (D)GH
BOMAR, s.r.o.
Těžební 1236/1
CZ 627 00, Brno
6

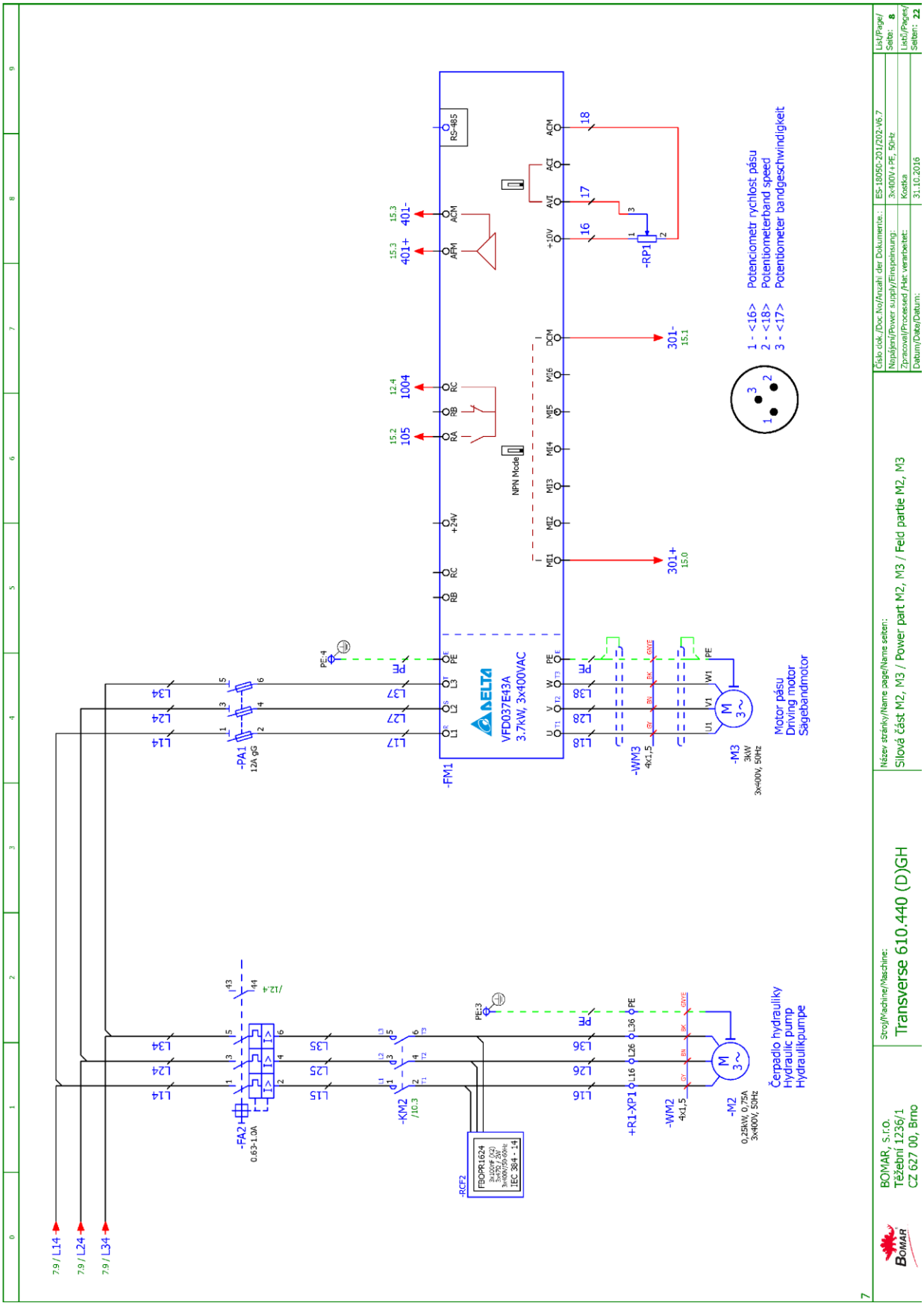

Schémata
Schemas
Schematics

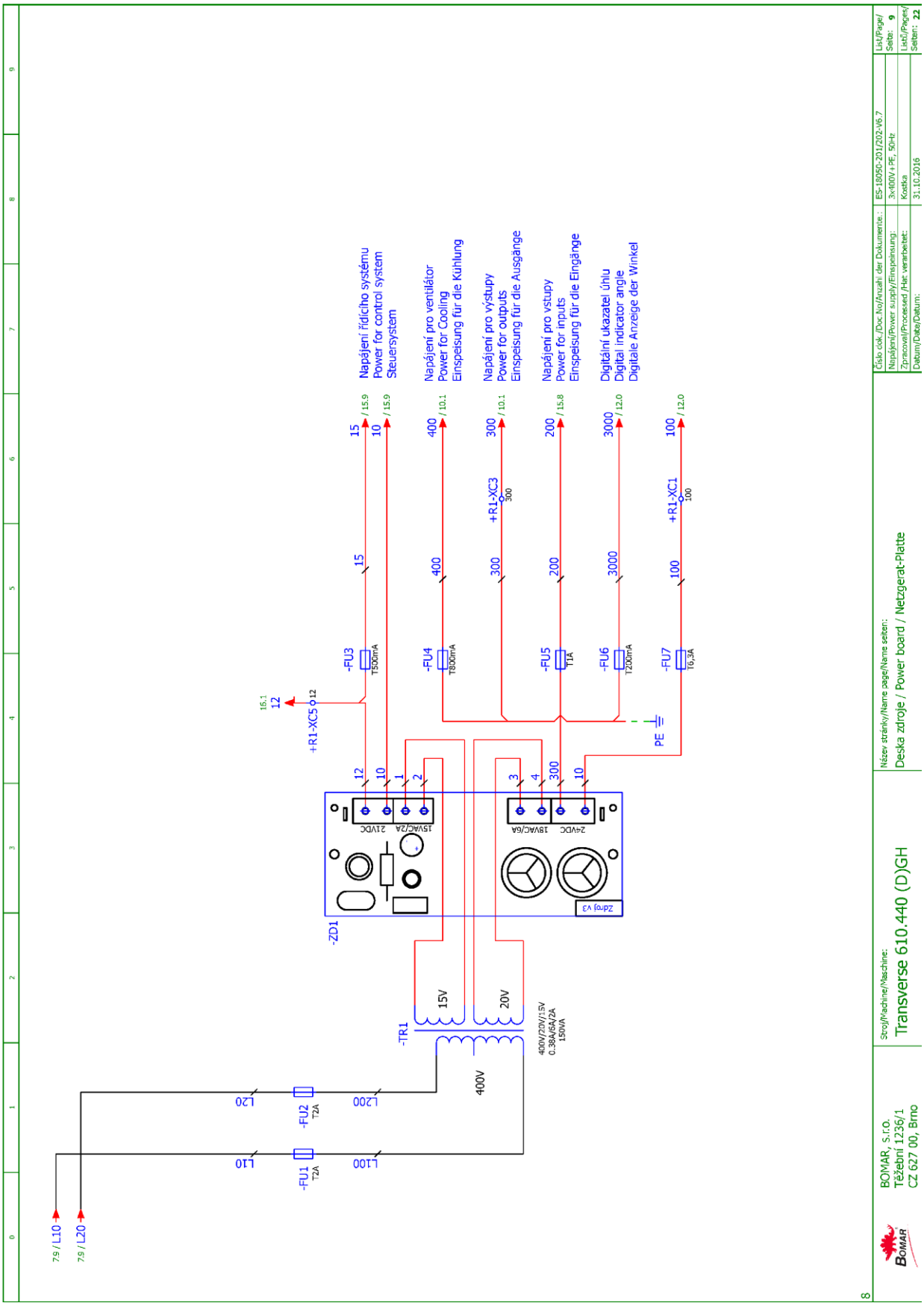
Napájení řídicího systému
Power for control system
Steuersystem
Napájení pro ventilátor
Power for Cooling
Einspeisung für die Kühlung
Napájení pro výstupy
Power for outputs
Einspeisung für die Ausgänge
Napájení pro vstupy
Power for inputs
Einspeisung für die Eingänge
Digitální ukazatel úhlu
Digital indicator angle
Digitale Anzeige der Winkel
-FU3 T500mA
-FU4 T800mA
-FU5 T1A
-FU6 T200mA
-FU7 T6,3A
+R1-XC5
+R1-XC3
+R1-XC1
-ZD1
Zdroj v3
15V/2A 21VDC
18VAC/6A 24VDC
-TR1
400V/20V/15V
0.38A/6A/2A
150VA
400V
-FU1 T2A
-FU2 T2A
L10
L20
L100
L200
PE
7.9 / L10
7.9 / L20
Číslo dok./Doc.No/Anzahl der Dokumente:
ES-18050-201/202-V6.7
Napájení/Power supply/Einspeisung:
3x400V+PE, 50Hz
Zpracoval/Processed /Hat verarbeitet:
Kostka
Datum/Date/Datum:
31.10.2016
List/Page/
Seite: 9
Listů/Pages/
Seiten: 22
Název stránky/Name page/Name seiten:
Deska zdroje / Power board / Netzgerat-Platte
Stroj/Machine/Maschine:
Transverse 610.440 (D)GH
BOMAR, s.r.o.
Těžební 1236/1
CZ 627 00, Brno

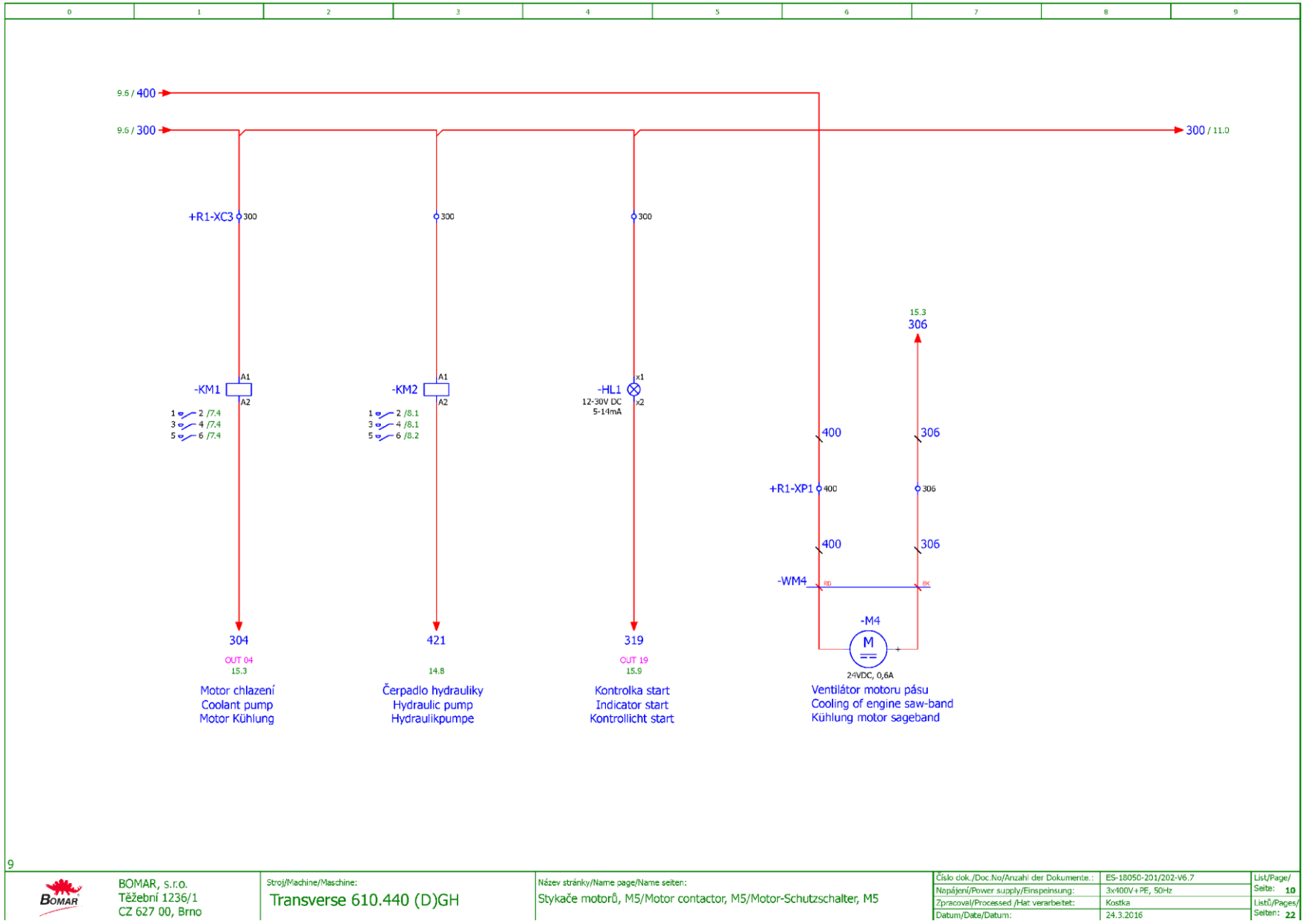

9

BOMAR, s.r.o. Těžební 1236/1 CZ 627 00, Brno	Stroj/Machine/Maschine: Transverse 610.440 (D)GH	Název stránky/Name page/Name seiten: Stykače motorů, M5/Motor contactor, M5/Motor-Schutzschalter, M5	Číslo dok./Doc.No/Anzahl der Dokumente.: ES-18050-201/202-V6.7 Napájení/Power supply/Einspeisung: 3x400V+PE, 50Hz Zpracoval/Processed /Hat verarbeitet: Kostka Datum/Date/Datum: 24.3.2016	List/Page/Seite: 10 Listů/Pages/Seiten: 22

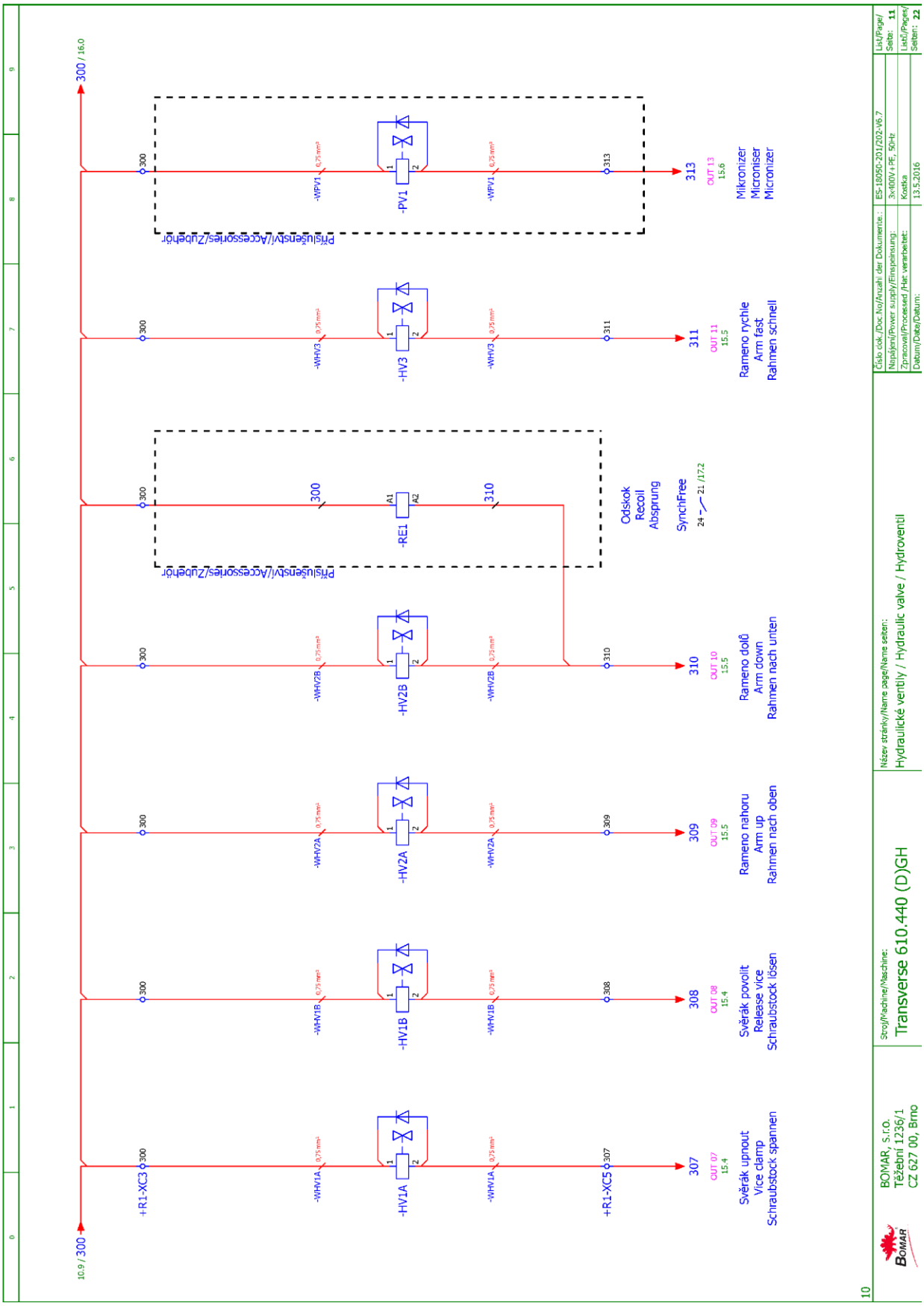
10.9 / 300
300 / 16.0
+R1-XC3
-WHV1A
-HV1A
+R1-XC5
307
OUT 07
15.4
Svěrák upnout
Vice clamp
Schraubstock spannen
-WHV1B
-HV1B
308
OUT 08
15.4
Svěrák povolit
Release vice
Schraubstock lösen
-WHV2A
-HV2A
309
OUT 09
15.5
Rameno nahoru
Arm up
Rahmen nach oben
-WHV2B
-HV2B
310
OUT 10
15.5
Rameno dolů
Arm down
Rahmen nach unten
Příslušenství/Accessories/Zubehör
-RE1
A1
A2
300
310
Odskok
Recoil
Absprung
SynchFree
24 >— 21 /17.2
-WHV3
-HV3
311
OUT 11
15.5
Rameno rychle
Arm fast
Rahmen schnell
-WPV1
-PV1
313
OUT 13
15.6
Mikronizer
Microniser
Micronizer
BOMAR, s.r.o.
Těžební 1236/1
CZ 627 00, Brno
Stroj/Machine/Maschine:
Transverse 610.440 (D)GH
Název stránky/Name page/Name seiten:
Hydraulické ventily / Hydraulic valve / Hydroventil
Číslo dok./Doc.No/Anzahl der Dokumente:
ES-18050-201/202-V6.7
Napájení/Power supply/Einspeisung:
3x400V+PE, 50Hz
Zpracoval/Processed /Hat verarbeitet:
Kostka
Datum/Date/Datum:
13.5.2016
List/Page/
Seite: 11
Listů/Pages/
Seiten: 22
10

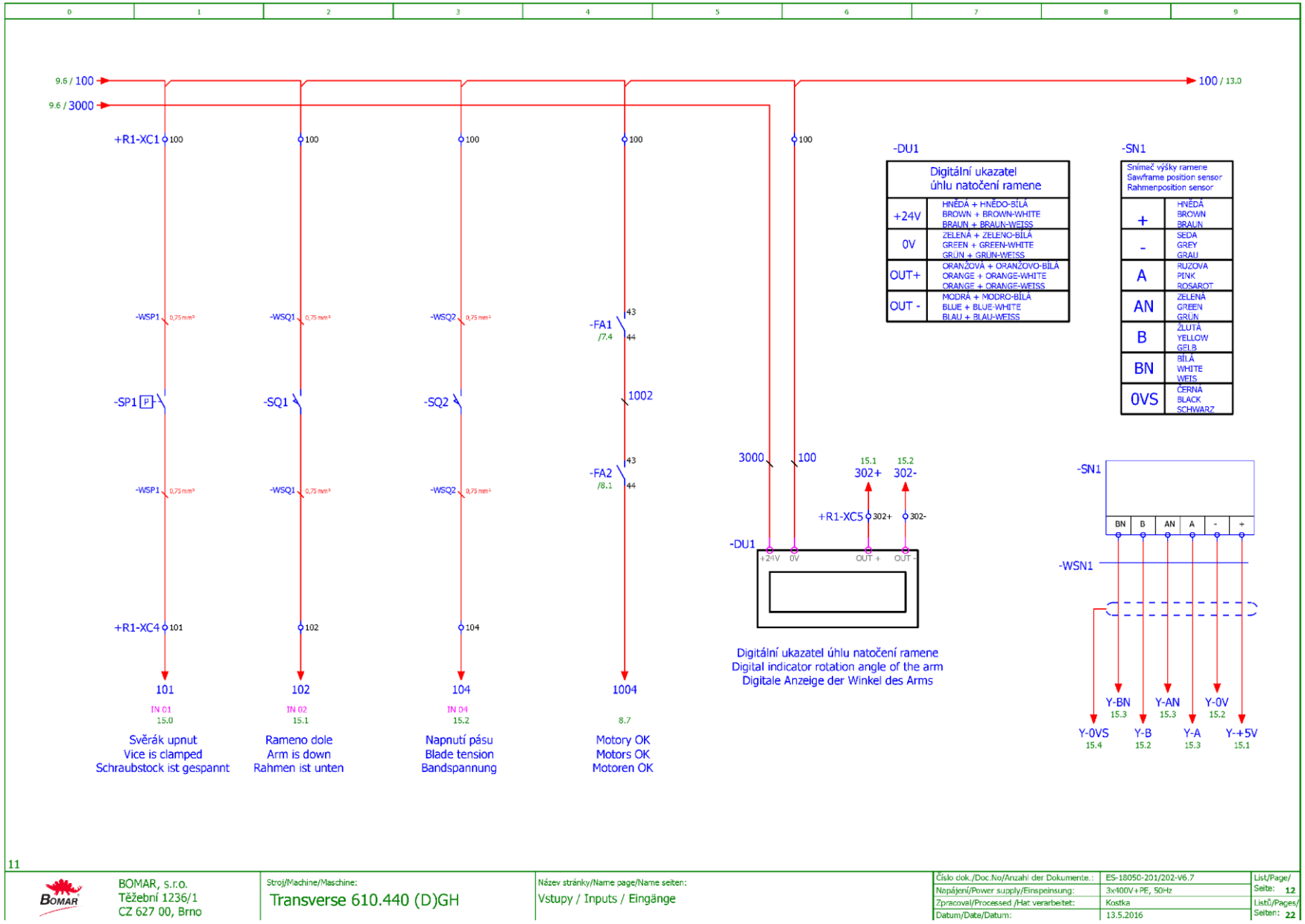

-DU1	Digitální ukazatel úhlu natočení ramene
+24V	HNĚDÁ + HNĚDO-BÍLÁ BROWN + BROWN-WHITE BRAUN + BRAUN-WEISS
0V	ZELENÁ + ZELENO-BÍLÁ GREEN + GREEN-WHITE GRÜN + GRÜN-WEISS
OUT+	ORANŽOVÁ + ORANŽOVO-BÍLÁ ORANGE + ORANGE-WHITE ORANGE + ORANGE-WEISS
OUT -	MODRÁ + MODRO-BÍLÁ BLUE + BLUE-WHITE BLAU + BLAU-WEISS

-SN1	Snímač výšky ramene Sawframe position sensor Rahmenposition sensor
+	HNĚDÁ BROWN BRAUN
-	SEDÁ GREY GRAU
A	RUŽOVÁ PINK ROSAROT
AN	ZELENÁ GREEN GRÜN
B	ŽLUTÁ YELLOW GELB
BN	BÍLÁ WHITE WEIS
0VS	ČERNÁ BLACK SCHWARZ

11

BOMAR, s.r.o.
Těžební 1236/1
CZ 627 00, Brno

Stroj/Machine/Maschine: Transverse 610.440 (D)GH

Název stránky/Name page/Name seiten: Vstupy / Inputs / Eingänge

Číslo dok./Doc.No/Anzahl der Dokumente.:	ES-18050-201/202-V6.7	List/Page/Seite: 12
Napájení/Power supply/Einspeisung:	3x400V+PE, 50Hz	Listů/Pages/Seiten: 22
Zpracoval/Processed /Hat verarbeitet:	Kostka	
Datum/Date/Datum:	13.5.2016	

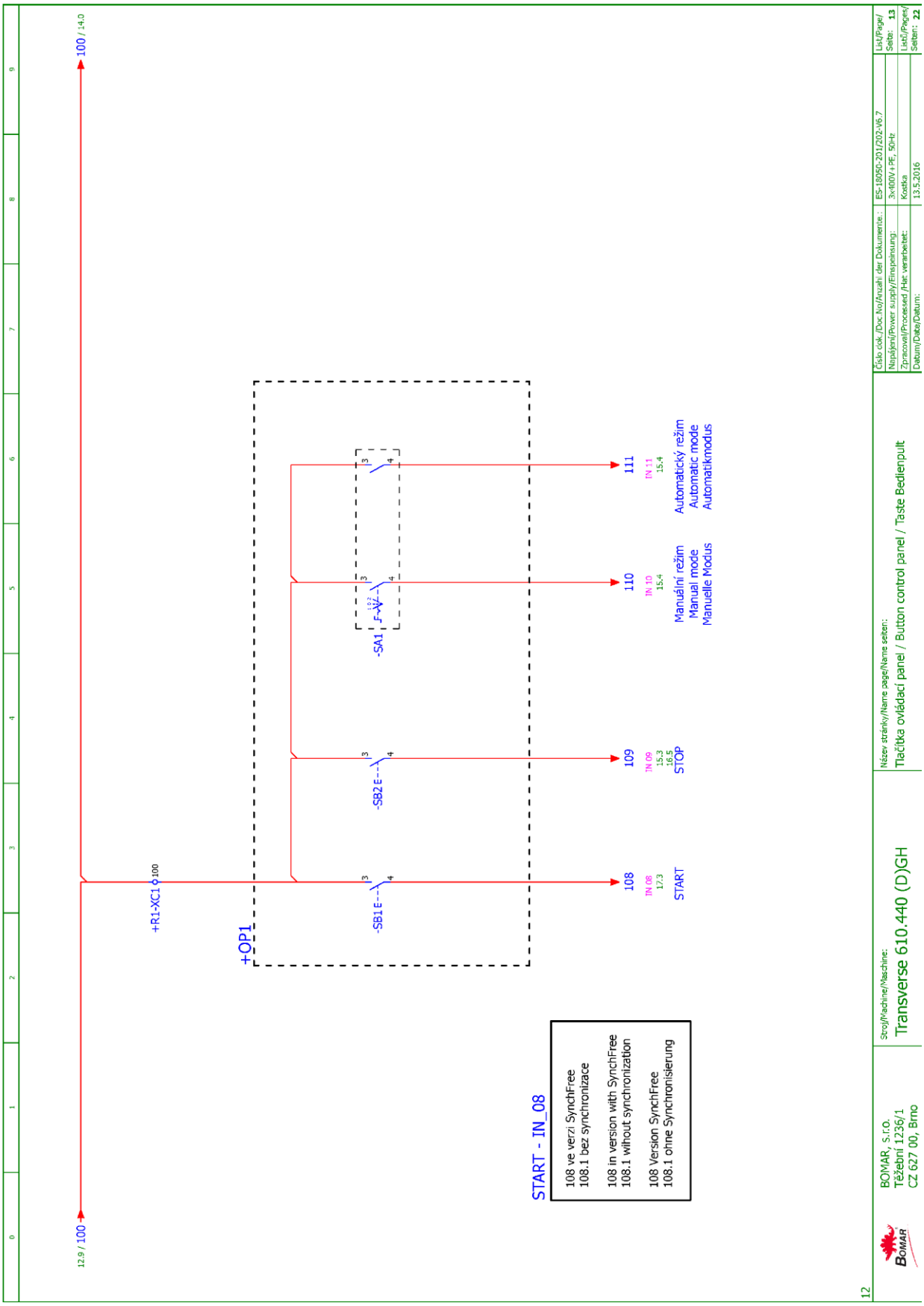
12.9 / 100
100 / 14.0
+R1-XC1
100
+OP1
-SB1 E
-SB2 E
-SA1
108
IN 08
17.3
START
109
IN 09
15.3
16.5
STOP
110
IN 10
15.4
Manuální režim
Manual mode
Manuelle Modus
111
IN 11
15.4
Automatický režim
Automatic mode
Automatikmodus
START - IN_08
108 ve verzi SynchFree
108.1 bez synchronizace
108 in version with SynchFree
108.1 without synchronization
108 Version SynchFree
108.1 ohne Synchronisierung
BOMAR, s.r.o.
Těžební 1236/1
CZ 627 00, Brno
Stroj/Machine/Maschine:
Transverse 610.440 (D)GH
Název stránky/Name page/Name seiten:
Tlačítka ovládací panel / Button control panel / Taste Bedienpult
Číslo dok./Doc.No/Anzahl der Dokumente:
ES-18050-201/202-V6.7
Napájení/Power supply/Einspeisung:
3x400V+PE, 50Hz
Zpracoval/Processed /Hat verarbeitet:
Kostka
Datum/Date/Datum:
13.5.2016
List/Page/
Seite: 13
Listů/Pages/
Seiten: 22
12

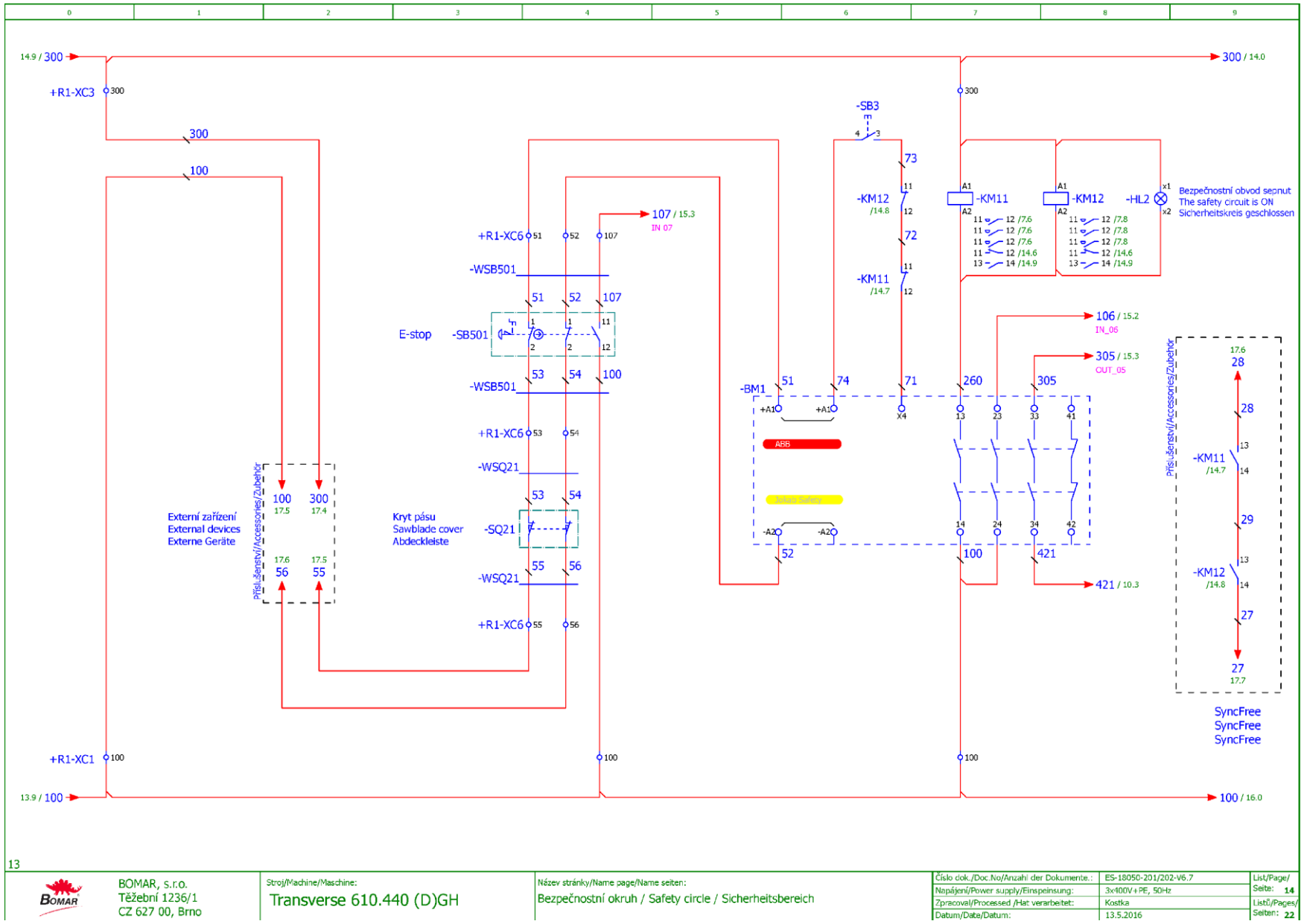

13

BOMAR, s.r.o. Těžební 1236/1 CZ 627 00, Brno	Stroj/Machine/Maschine: Transverse 610.440 (D)GH	Název stránky/Name page/Name seiten: Bezpečnostní okruh / Safety circle / Sicherheitsbereich	Číslo dok./Doc.No/Anzahl der Dokumente.: ES-18050-201/202-V6.7 Napájení/Power supply/Einspeisung: 3x400V+PE, 50Hz Zpracoval/Processed /Hat verarbeitet: Kostka Datum/Date/Datum: 13.5.2016	List/Page/Seite: 14 Listů/Pages/Seiten: 22

Schémata
Schemas
Schematics

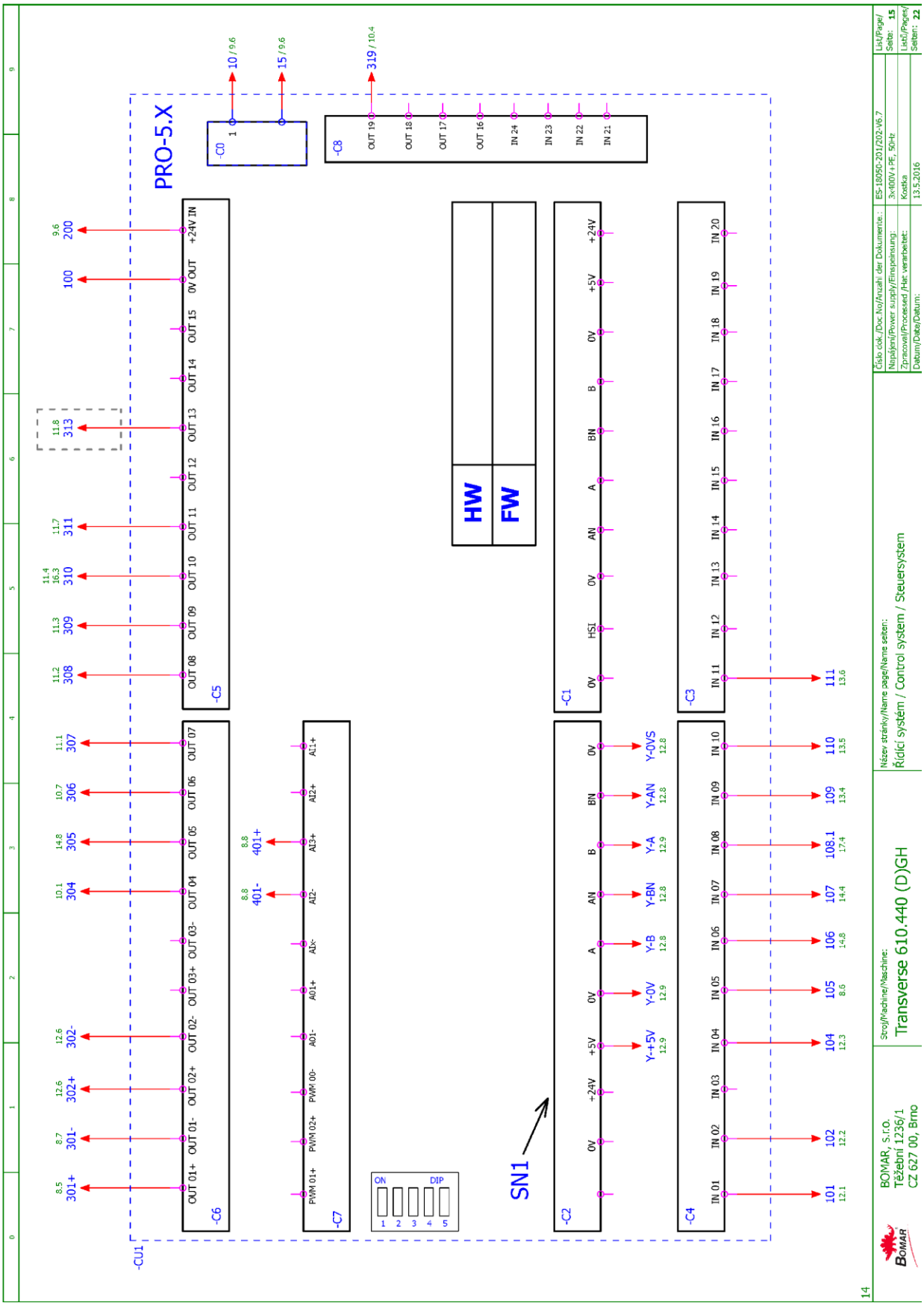
PRO-5.X
-CU1
-C0
-C8
-C5
-C6
-C7
-C1
-C2
-C3
-C4
HW
FW
SN1
ON
DIP
Název stránky/Name page/Name seiten:
Řídící systém / Control system / Steuersystem
Stroj/Machine/Maschine:
Transverse 610.440 (D)GH
BOMAR, s.r.o.
Těžební 1236/1
CZ 627 00, Brno
ES-18050-201/202-V6.7
3x400V+PE, 50Hz
Kostka
13.5.2016
List/Page/Seite: 15
Listů/Pages/Seiten: 22
14

Schémata
Schemas
Schematics

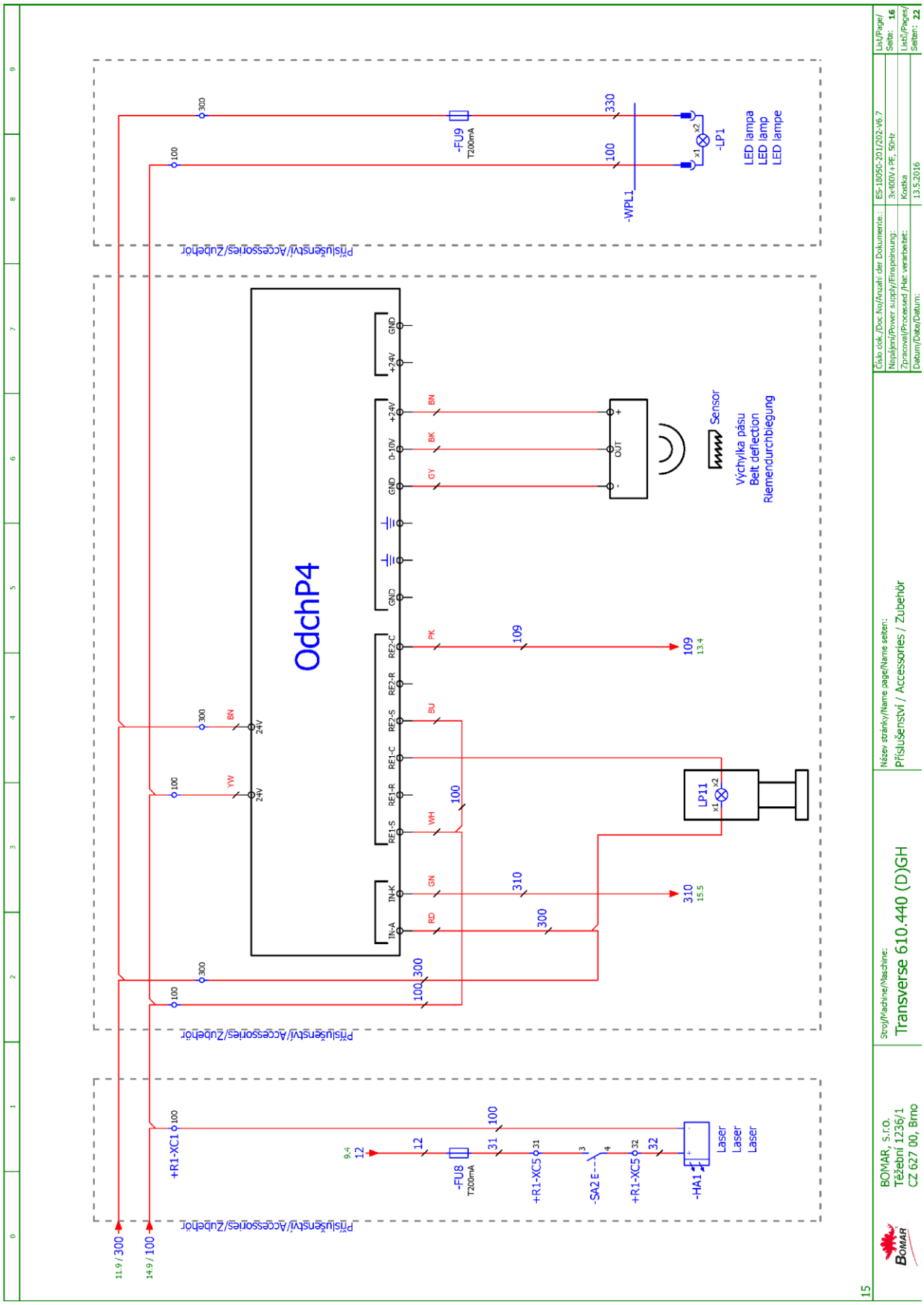

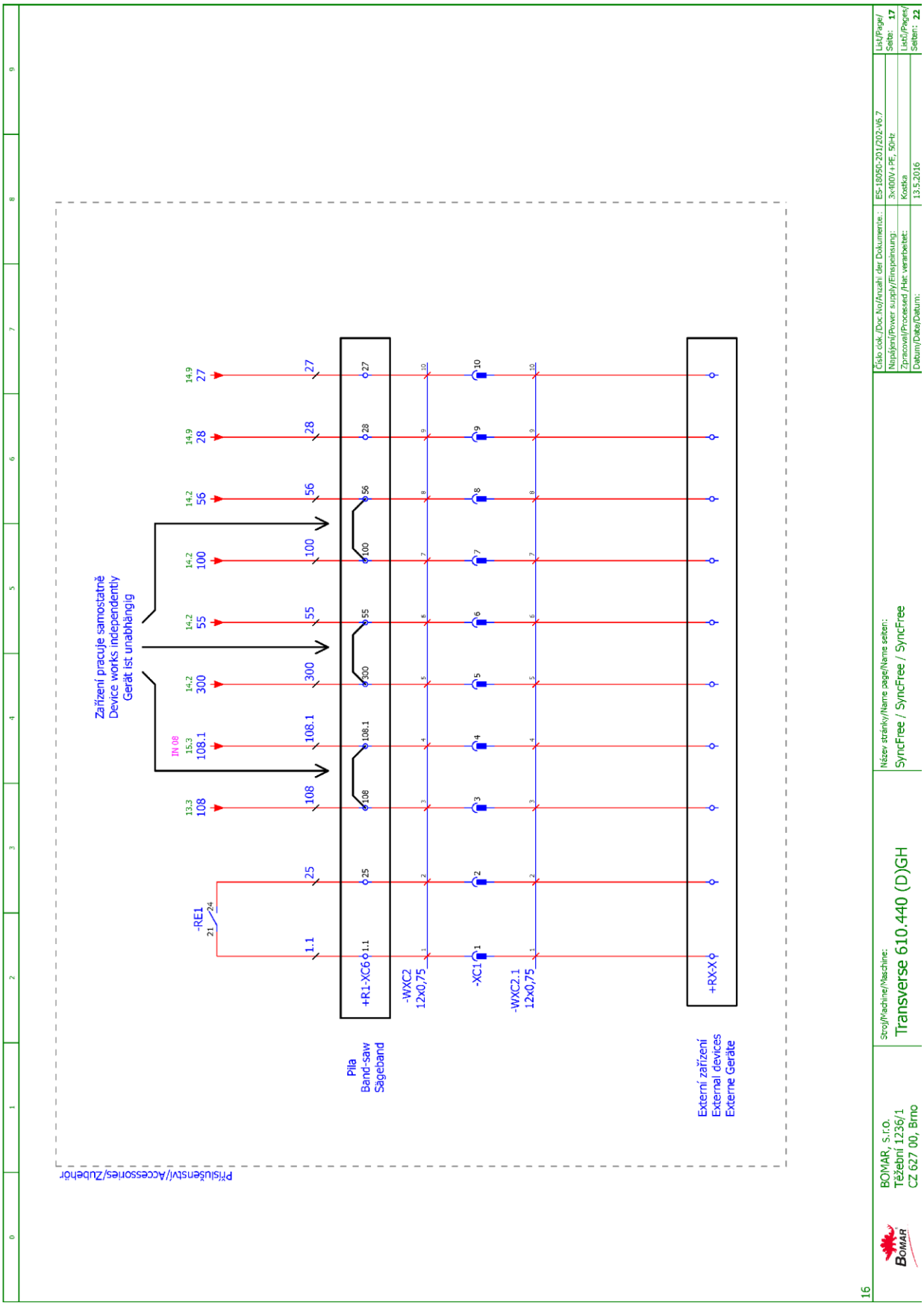
Zařízení pracuje samostatně
Device works independently
Gerät ist unabhängig
IN 08
-RE1
+R1-XC6
-WXC2
12x0,75
-XC1
-WXC2.1
12x0,75
+RX-X
Pila
Band-saw
Sageband
Externí zařízení
External devices
Externe Geräte
Příslušenství/Accessories/Zubehör
BOMAR, s.r.o.
Těžební 1236/1
CZ 627 00, Brno
Stroj/Machine/Maschine:
Transverse 610.440 (D)GH
Název stránky/Name page/Name seiten:
SyncFree / SyncFree / SyncFree
Číslo dok./Doc. No/Anzahl der Dokumente:
ES-18050-201/202-V6.7
Napájení/Power supply/Einspeisung:
3x400V+PE, 50Hz
Zpracoval/Processed /Hat verarbeitet:
Kostka
Datum/Date/Datum:
13.5.2016
List/Page/
Seite: 17
Listů/Pages/
Seiten: 22
16

6.1.2. 3×230 V + PE, 50 Hz

Obsah / Table of contents / Inhalt

Kusovník artiklů / Parts list / Stückliste

Označení přístroje Device identification Geräteidentifikation	Typ přístroje Device description Gerätebeschreibung	Objednací číslo Type number Typennummer	Výrobce Manufacturer Hersteller	Skladové číslo Part number Lagernummer	Množství Quantity Menge	Umístění Location Stelle
-ZD1	Napájecí zdroj - 15VAC/24VDC; 20VAC/28VDC Power supply unit - 15VAC/24VDC; 20VAC/28VDC Netzteil - 15VAC/24VDC; 20VAC/28VDC	ZDR-03	Bomar	265.915	1	/9.2
-BM1	Bezpečnostní relé 24VDC, 3NO Safety relay 24VDC, 3NO Sicherheitsrelais 24VDC, 3NO	BT50	ABB	91.051.063	1	/14.5
-CU1	Klávesnice - fóliová Touch-sensitive keyboard Folientastatur	31.R230-207	AKI ELECTRONIC,spol.s.r.o.	31.R230-207	1	/15.0
-SN1	Snímač výšky ramene Arm height sensor Arm Höhensensor	DHB	ASTP	251.232	1	/12.8
-FA2	Motorový spouštěč - 1.6A Motor starter - 1.6A Motorstarter - 1.6A	MS116-1,6	ABB	91.045.020	1	/8.1
-FU1	Pojistka trubičková - 2A/250V, pomalá, 5x20 Tube fuse - 2A/250V, slow, 5x20 Rohrsicherung - 2A / 250V, langsam, 5x20	T2A/250V	ESKA	91.230.001	1	/9.0
-FU2	Pojistka trubičková - 2A/250V, pomalá, 5x20 Tube fuse - 2A/250V, slow, 5x20 Rohrsicherung - 2A / 250V, langsam, 5x20	T2A/250V	ESKA	91.230.001	1	/9.1
-FU3	Pojistka trubičková - 500mA/250V, pomalá, 5x20 Tube fuse - 500mA/250V, slow, 5x20 Rohrsicherung - 500 mA / 250 V, langsam, 5x20	T500mA/250V	ESKA	91.230.011	1	/9.4
-FU7	Pojistka trubičková - 6,3A/250V, pomalá, 5x20 Tube fuse - 6,3A/250V, slow, 5x20 Rohrsicherung - T6,3A / 250V, langsam, 5x20	T6,3A/250V	ESKA	91.230.002	1	/9.4
-RP1	Potenciometr 4k7 Potenciometer 4k7 Potentiometer 4k7	TP195 4k7/N20A	Elektronické součástky CZ, a.s	91.283.015	1	/8.7
-RP1	Hlavice potenciometru - 24mm Head of potentiometer 24mm Leiter Potentiometer 24mm	S8877 BLK	GES-ELECTRONICS, a.s.	91.060.063	1	/8.7
-RCF1	Filtr RFC vývodový Efferent RFC filter Ableitenden RFC Filter	FBOPR1624	Ing. Miroslav Vlček	91.041.015	1	/7.3

The manufacturer reserves right to use an equivalent replacement device.

2

Kusovník artiklů / Parts list / Stückliste

Označení přístroje Device identification Geräteidentifikation	Typ přístroje Device description Gerätebeschreibung	Objednací číslo Type number Typennummer	Výrobce Manufacturer Hersteller	Skladové číslo Part number Lagernummer	Množství Quantity Menge	Umístění Location Stelle
-RCF2	Filtr RFC vývodový Efferent RFC filter Ableitenden RFC Filter	FBOPR1624	Ing. Miroslav Vlček	91.041.015	1	/8.0
-RCF11	Filtr RFC vývodový Efferent RFC filter Ableitenden RFC Filter	FBOPR1624	Ing. Miroslav Vlček	91.041.015	1	/7.6
-RCF12	Filtr RFC vývodový Efferent RFC filter Ableitenden RFC Filter	FBOPR1624	Ing. Miroslav Vlček	91.041.015	1	/7.7
-FA1	Motorový spouštěč - 0.4A Motor starter - 0.4A Motorstarter - 0.4A	MS116-0,4	ABB	91.045.017	1	/7.4
-FA1	Pomocné kontakty - 1xNO+1xNC Auxiliary contacts - 1xNO+1xNC Hilfskontakte - 1xNO+1xNC	HKF1-11	ABB	91.046.002	1	/7.4
-FA2	Pomocné kontakty - 1xNO+1xNC Auxiliary contacts - 1xNO+1xNC Hilfskontakte - 1xNO+1xNC	HKF1-11	ABB	91.046.002	1	/8.1
-FU1	Svorka pojistková Fuse terminal Sicherungsklemme	WK4/THSi5U	WIELAND	91.251.102	1	/9.0
-FU2	Svorka pojistková Fuse terminal Sicherungsklemme	WK4/THSi5U	WIELAND	91.251.102	1	/9.1
-FU3	Svorka pojistková Fuse terminal Sicherungsklemme	WK4/THSi5U	WIELAND	91.251.102	1	/9.4
-FU4	Svorka pojistková Fuse terminal Sicherungsklemme	WK4/THSi5U	WIELAND	91.251.102	1	/9.4
-FU4	Pojistka trubičková - 800mA/250V, pomalá, 5x20 Tube fuse - 800A/250V, slow, 5x20 Rohrsicherung - 800A / 250V, langsam, 5x20	T800mA/250V	ESKA	91.230.010	1	/9.4
-FU5	Svorka pojistková Fuse terminal Sicherungsklemme	WK4/THSi5U	WIELAND	91.251.102	1	/9.4

The manufacturer reserves right to use an equivalent replacement device.

3

Kusovník artiklů / Parts list / Stückliste

Označení přístroje Device identification Geräteidentifikation	Typ přístroje Device description Gerätebeschreibung	Objednací číslo Type number Typennummer	Výrobce Manufacturer Hersteller	Skladové číslo Part number Lagernummer	Množství Quantity Menge	Umístění Location Stelle
-FU5	Pojistka trubičková - 1A/250V, pomalá, 5x20 Tube fuse - 1A/250V, slow, 5x20 Rohrsicherung - 1A / 250V, langsam, 5x20	T1A/250V	ESKA	91.230.031	1	/9.4
-FU6	Svorka pojistková Fuse terminal Sicherungsklemme	WK4/THSi5U	WIELAND	91.251.102	1	/9.4
-FU6	Pojistka trubičková - 200mA/250V, pomalá, 5x20 Tube fuse - 200mA/250V, slow, 5x20 Rohrsicherung - 160mA / 250V, langsam, 5x20	T200mA/250V	ESKA	91.230.037	1	/9.4
-FU7	Svorka pojistková Fuse terminal Sicherungsklemme	WK4/THSi5U	WIELAND	91.251.102	1	/9.4
-FU8	Pojistka trubičková - 200mA/250V, pomalá, 5x20 Tube fuse - 200mA/250V, slow, 5x20 Rohrsicherung - 160mA / 250V, langsam, 5x20	T200mA/250V	ESKA	91.230.037	1	/16.1
-FU8	Svorka pojistková Fuse terminal Sicherungsklemme	WK4/THSi5U	WIELAND	91.251.102	1	/16.1
-FU9	Pojistka trubičková - 200mA/250V, pomalá, 5x20 Tube fuse - 200mA/250V, slow, 5x20 Rohrsicherung - 160mA / 250V, langsam, 5x20	T200mA/250V	ESKA	91.230.037	1	/16.9
-FU9	Svorka pojistková Fuse terminal Sicherungsklemme	WK4/THSi5U	WIELAND	91.251.102	1	/16.9
-HL1	Signálka zelená na adaptér Green light for Eaton adapter Grünes Licht für Eaton-Adapter	M22-LED-G	EATON	91.061.023	1	/10.4
-KM1	Ministýkač 4kW/400V Minicontactor 4kW/400V Minischutz 4kW/400V	B6S-30-01-1.7-71	ABB	91.040.049	1	/10.1
-KM2	Ministýkač 4kW/400V Minicontactor 4kW/400V Minischutz 4kW/400V	B6S-30-01-1.7-71	ABB	91.040.049	1	/10.3
-KM11	Stýkač 5,5kW/400V Contactor 5,5kW/400V Schütz 5,5kW/400V	AF12-30-01-11	ABB	91.040.051	1	/14.7

The manufacturer reserves right to use an equivalent replacement device.

3.a

Kusovník artiklů / Parts list / Stückliste

Označení přístroje Device identification Geräteidentifikation	Typ přístroje Device description Gerätebeschreibung	Objednací číslo Type number Typennummer	Výrobce Manufacturer Hersteller	Skladové číslo Part number Lagernummer	Množství Quantity Menge	Umístění Location Stelle
-KM11	Pomocný kontakt - 1xNC Auxiliary contact - 1xNC Hilfskontakt - 1 xNC	CA4-01	ABB	91.041.043	1	/14.7
-KM12	Ministýkač 4kW/400V Minicontactor 4kW/400V Minischutz 4kW/400V	B6S-30-01-1.7-71	ABB	91.040.049	1	/14.8
-KM12	Pomocné kontakty - 1xNO+1xNC Auxiliary contacts - 1xNO+1xNC Hilfskontakte - 1xNO+1xNC	CAF 6-11M	ABB	91.041.042	1	/14.8
-PA1	Pojistkový odpínač pro válcové vložky - 3P Switch fuse for the cylinder inserts - 3P Schalter Sicherung für den Zylindereinsätze - 3P	E 93/32	ABB	91.241.014	1	/8.4
-QS1.1	3 pólový odpínač, 40A Disconnector - 3P, 40A Trennschalter - 3P, 40A	OT40FT3	ABB	91.170.019	1	/7.0
-QS1.1	Rukojeť odpínače - černá Handle switch - black Griffschalter - schwarz	OHBS2RJ	ABB	91.180.015	1	/7.0
-QS1.1	Kryt svorek Terminal shroud Klemmenabdeckung	OTS40T3	ABB	91.170.017	1	/7.0
-RP1	Svorka rychloupínací Fastconnect clamp Fast Connect Klemm	WAGO 224-112	WAGO	91.250.009	3	/8.7
-SA1	Hlavice 3 polohového přepínače Head of 3 position switch Leiter der 3-Positionsschalter	M22-WRK3	EATON	91.060.051	1	/13.5
-SA1	Kontaktní blok - 1NO Contact block - 1NO Kontaktblock - 1NO	M22-K10	EATON	91.061.022	1	/13.5
-SA1	Upevňovací adaptér + 1NO Attaching adapter + 1NO Montageadapter + 1NO	M22-AK10	EATON	91.061.021	1	/13.5
-SA1.2	Hlavice tlačítka - černá Head button - black Kopftaste - schwarz	M22-D-S	EATON	91.060.035	1	/16.1

The manufacturer reserves right to use an equivalent replacement device.

3.b

Kusovník artiklů / Parts list / Stückliste

Označení přístroje Device identification Geräteidentifikation	Typ přístroje Device description Gerätebeschreibung	Objednací číslo Type number Typennummer	Výrobce Manufacturer Hersteller	Skladové číslo Part number Lagernummer	Množství Quantity Menge	Umístění Location Stelle
-SA1.2	Upevňovací adaptér + 1NO Attaching adapter + 1NO Montageadapter + 1NO	M22-AK10	EATON	91.061.021	1	/16.1
-SB1	Hlavice prosvětleného tlačítka zelená Green transparent switch Grün transparent Schalter	M22-DL-G	EATON	91.060.031	1	/13.3
-SB1	Upevňovací adaptér + 1NO Attaching adapter + 1NO Montageadapter + 1NO	M22-AK10	EATON	91.061.021	1	/13.3
-SB2	Upevňovací adaptér + 1NO Attaching adapter + 1NO Montageadapter + 1NO	M22-AK10	EATON	91.061.021	1	/13.4
-SB2	Hlavice tlačítka - černá Head button - black Kopftaste - schwarz	M22-D-S	EATON	91.060.035	1	/13.4
-SB3	Upevňovací adaptér + 1NO Attaching adapter + 1NO Montageadapter + 1NO	M22-AK10	EATON	91.061.021	1	/14.6
-SB3	Hlavice prosvětleného tlačítka žlutá Yellow trasparent switch Leiter beleuchtet gelbe Taste	M22-DL-Y	EATON	91.060.053	1	/14.6
-SB501	Total stop - hlavice + 3xNC Emergency-stop mushroom push - button + 3xNC Not-Aus-Pilz - Taster + 3 xNC	YW1B-V4E02R	IDEC	91.060.084	1	/14.3
-SB501	Kontakt - 1x NO Contact - 1x NO Kontakt - 1x NO	YW-E10	IDEC	91.061.044	1	/14.3
-TR1	Toroidal transformer - 0-230-400V/20V/15V, 150VA Toroidal transformer - 0-230-400V/20V/15V, 150VA Ringkerntransformator - 0-230V-400V/20V/15V, 150VA	400V/230V/20V/15V 6A/2A 150VA	KARBAN s.r.o.	91.080.026	1	/9.1
-SQ21	Bezpečnostní koncový spínač - 2xNC Safety Limit Switch - 2x NC Sicherheitsendschalter - 2x NC	QKS8	KEDU	91.173.012	1	/14.3
-PA1	Pojistka válcová - 25A, 10x38, rychlá Tube fuse - 25A, 10x38, fast Rohrsicherung - 25A, 10x38, schnell	PV10 25A gG	OEZ	91.230.021	1	/8.4

The manufacturer reserves right to use an equivalent replacement device.

3.c

BOMAR, s.r.o.
Těžební 1236/1
CZ 627 00, Brno

Stroj/Machine/Maschine: Transverse 610.440 DGH

Název stránky/Name page/Name seiten: Kusovník artiklů / Parts list / Artikelstückliste

Číslo dok./Doc.No/Anzahl der Dokumente.:	ES-18050-203-V6.7
Napájení/Power supply/Einspeisung:	3x230V+PE, 50Hz
Zpracoval/Processed /Hat verarbeitet:	Kostka
Datum/Date/Datum:	13.5.2016

List/Page/Seite: 3.d
Listů/Pages/Seiten: 22

Kusovník artiklů / Parts list / Stückliste

Označení přístroje Device identification Geräteidentifikation	Typ přístroje Device description Gerätebeschreibung	Objednací číslo Type number Typennummer	Výrobce Manufacturer Hersteller	Skladové číslo Part number Lagernummer	Množství Quantity Menge	Umístění Location Stelle
-SQ1	Koncový spínač - 1NC+1NO Limit switch - 1NC+1NO Endschalter - 1NC+1NO	D4N-4A31	OMRON	91.173.007	1	/12.2
-SQ2	Koncový spínač - 1NC+1NO Limit switch - 1NC+1NO Endschalter - 1NC+1NO	D4N-4A31	OMRON	91.173.007	1	/12.3
-FM1	Frekvenční měnič - 3.7kW, 3x230VAC Frequency converter - 3.7kW, 3x230VAC Frequenzumrichter - 3.7 kW, 3x230VAC	VFD037E23A	DELTA ELECTRONICS, INC.	91.012.090	1	/8.4
-CU1	Řídící obvod Control circuit Die Steuerschaltung	PRO-5.X	Bomar	91.995.221	1	/15.0
-RCF0	RFC-filtr - 5.5 kW, 3x400V/230V, 25A RFC-filter - 5.5 kW, 3x400V/230V, 25A RFC-filter - 5.5 kW, 3x400V/230V, 25A	ATV31/5,5KW	Ing. Miroslav Vlček	91.041.027	1	/8.4
-M4	Ventilátor 24VDC, 154CFM Fan 24VDC, 154CFM Fan 24VDC, 154CFM	RDH1238 B2	Xinruilian Electronic Co.	91.015.126	1	/10.6

The manufacturer reserves right to use an equivalent replacement device.

3.d

Transverse 610.440 DGH

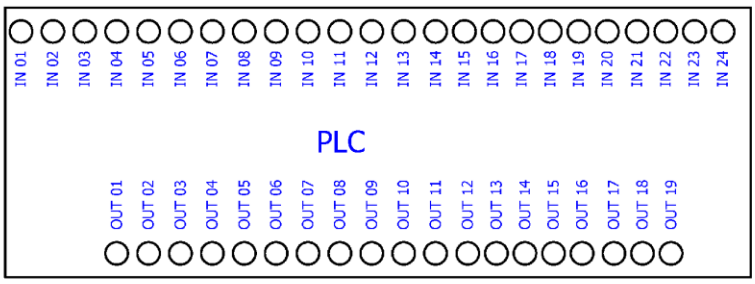

HW	
FW	

Pohled ze spodu/From under view/Blick nach

I/O	CZE	ENG	DE
IN 01	Svěrák upnut	Vice is clamped	Schraubstock ist gespannt
IN 02	Rameno dole	Arm is down	Rahmen ist unten
IN 03	NC	NC	NC
IN 04	Napnutí pásu	Blade tension	Bandspannung
IN 05	Motory OK	Motors OK	Motoren OK
IN 06	Bezpečnostní okruh uzavřen	Safety circle shut down	Sicherheitsschaltung gesperrt
IN 07	Tlačítko TOTAL STOP	Button TOTAL STOP	Taste TOTAL STOP
IN 08	Tlačítko START	Button START	Taste START
IN 09	Tlačítko STOP	Button STOP	Taste STOP
IN 10	MANUAL	MANUAL	MANUAL
IN 11	CYKLUS	CYCLE	ZYKLUS
IN 12	NC	NC	NC
IN 13	NC	NC	NC
IN 14	NC	NC	NC
IN 15	NC	NC	NC
IN 16	NC	NC	NC
IN 17	NC	NC	NC
IN 18	NC	NC	NC
IN 19	NC	NC	NC
IN 20	NC	NC	NC
IN 21	NC	NC	NC
IN 22	NC	NC	NC
IN 23	NC	NC	NC
IN 24	NC	NC	NC
OUT 01+ OUT 01-	Start FM1	Start FM1	Start FM1
OUT 02+ OUT 02-	Digitální ukazatel úhlu natočení ramene	Digital indicator rotation angle of the arm	Digitale Anzeige der Winkel des Arms
OUT 03+ OUT 03-	NC	NC	NC
OUT 04	Motor chlazení	Coolant pump	Motor Kühlung
OUT 05	Čerpadlo hydrauliky	Hydraulic pump	Hydraulikpumpe
OUT 06	NC	NC	NC
OUT 07	Svěrák upnout	Vice clamp	Schraubstock spannen
OUT 08	Svěrák povolit	Release vice	Schraubstock lösen
OUT 09	Rameno nahoru	Arm up	Rahmen nach oben
OUT 10	Rameno dolů	Arm down	Rahmen nach unten
OUT 11	Rameno rychle	Arm fast	Rahmen schnell
OUT 12	NC	NC	NC
OUT 13	Mikronizer	Microniser	Mikronizer
OUT 14	NC	NC	NC
OUT 15	NC	NC	NC
OUT 16	NC	NC	NC
OUT 17	NC	NC	NC
OUT 18	NC	NC	NC
OUT 19	Kontrolka start	Indicator start	Kontrollicht start

BOMAR, s.r.o.
Těšební 1236/1
CZ 627 00, Brno

Stroj/Machine/Maschine: Transverse 610.440 DGH

Název stránky/Name page/Name seiten: I/O řídící systém / I/O Control station / I/O Steuerung

Číslo ctk./Doc No/Anzahl der Dokumente: ES-1805D-203-v6.7

Napájení/Power supply/Einspeisung: 3x230V+PE, 50Hz

Zpracoval/Processed /Hat verarbeitet: Kostka

Datum/Date/Datum: 11.7.2017

List/Page/Seite: 4

List/Page/Seiten: 22

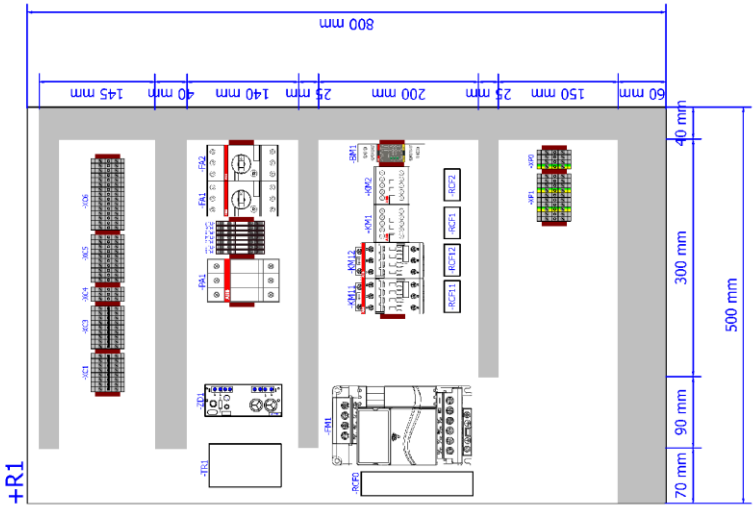

Číslo dok./Doc. No/Anzahl der Dokumente: ES-18050-203-V6.7
Napájení/Power supply/Einspeisung: 3x230V + PE, 50Hz
Zpracoval/Processed /Hat verarbeitet: Kostka
Datum/Date/Datum: 11.7.2017
List/Page/Seite: 5
List/Pages/Seiten: 22

Název stránky/Name page/Name seiten:
Rozmístění prvků v rozváděči R1 / Placement of elements in enclosure R1 / Platzierung der Elemente im Schaltschrank R1

Stroj/Machine/Maschine:
Transverse 610.440 DGH

BOMAR, S.r.o.
Těžební 1236/1
CZ 627 00, Brno

4

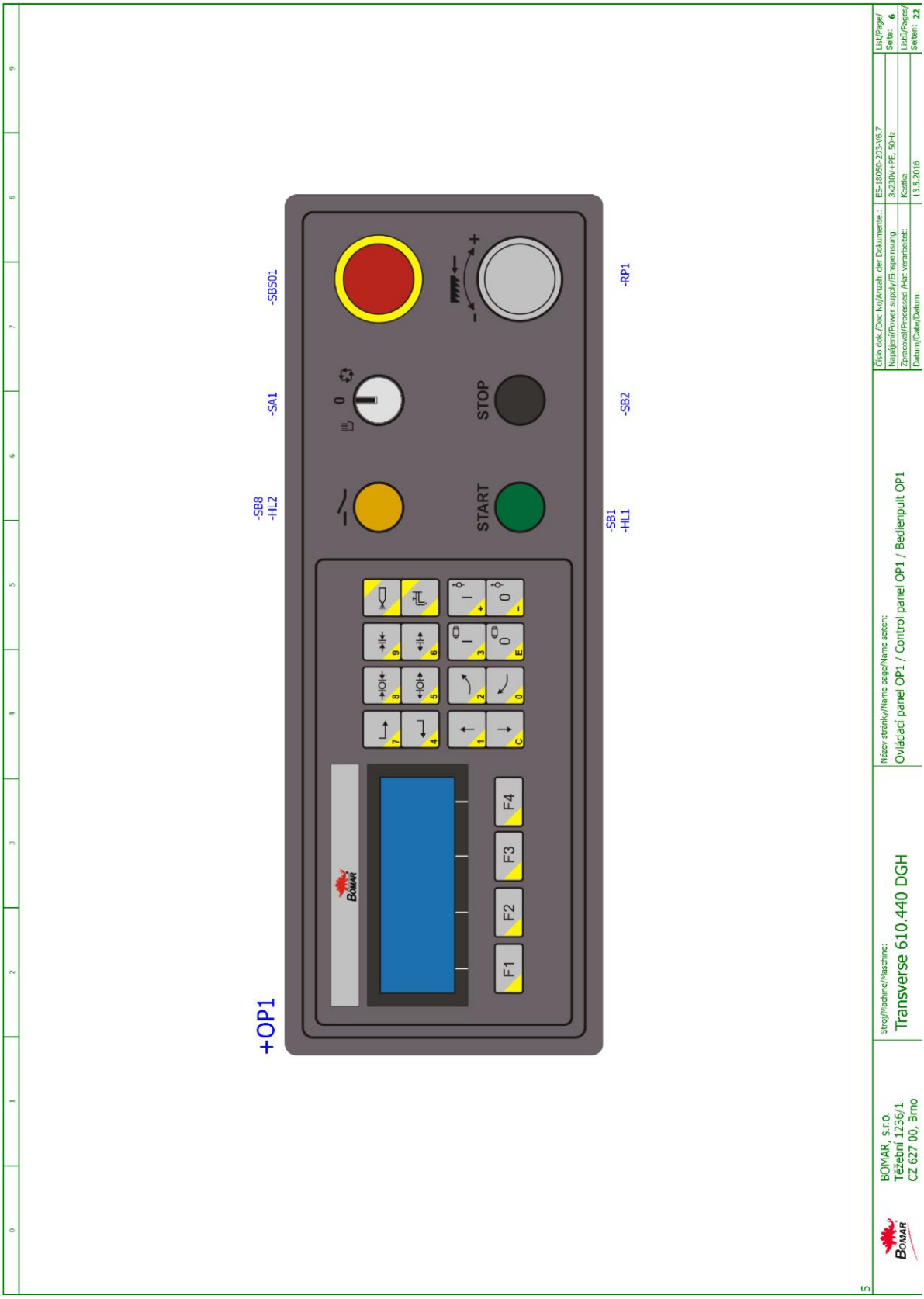

Schémata
Schemas
Schematics

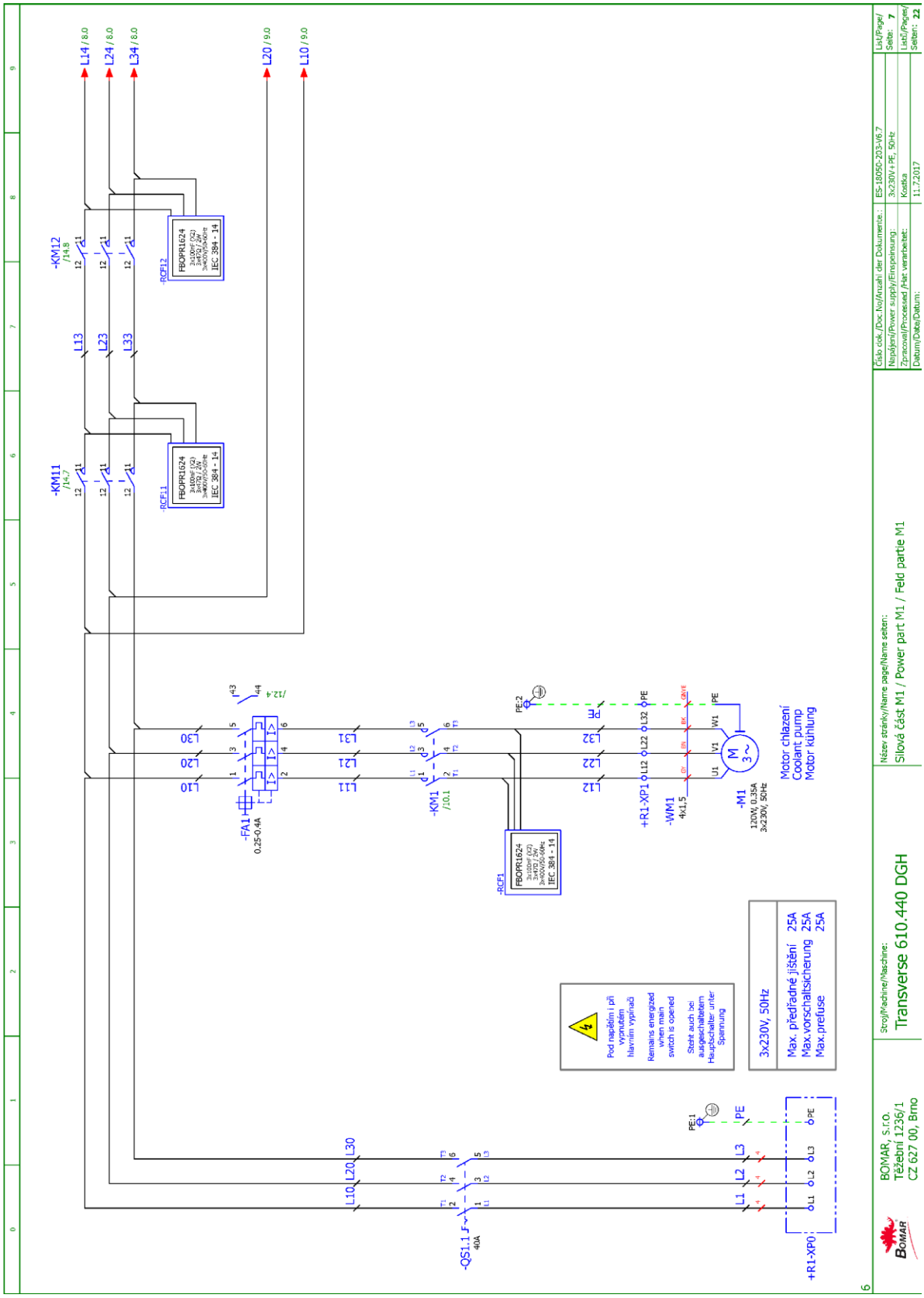
L14 / 8.0
L24 / 8.0
L34 / 8.0
L20 / 9.0
L10 / 9.0
-KM12
/14.8
-KM11
/14.7
L13
L23
L33
-RCF12
-RCF11
FBOPR1624
IEC 384 - 14
/12.4
-FA1
0,25-0,4A
-KM1
/10.1
-RCF1
PE:2
+R1-XP1
-WM1
4x1,5
-M1
120W, 0,35A
3x230V, 50Hz
Motor chlazení
Coolant pump
Motor kühlung
Pod napětím i při vypnutém hlavním vypínači
Remains energized when main switch is opened
Steht auch bei ausgeschaltetem Hauptschalter unter Spannung
3x230V, 50Hz
Max. předřadné jištění 25A
Max.vorschaltsicherung 25A
Max.prefuse
PE:1
-QS1.1
40A
+R1-XP0
Číslo dok. /Doc. No/Anzahl der Dokumente: ES-18050-203-V6.7
Napájení/Power supply/Einspeisung: 3x230V + PE, 50Hz
Zpracoval/Processed /Hat verarbeitet: Kostka
Datum/Date/Datum: 11.7.2017
List/Page/ Seite: 7
List/Pages/ Seiten: 22
Název stránky/Name page/Name seiten:
Silová část M1 / Power part M1 / Feld partie M1
Stroj/Machine/Maschine:
Transverse 610.440 DGH
BOMAR, S.r.o.
Těžební 1236/1
CZ 627 00, Brno
6

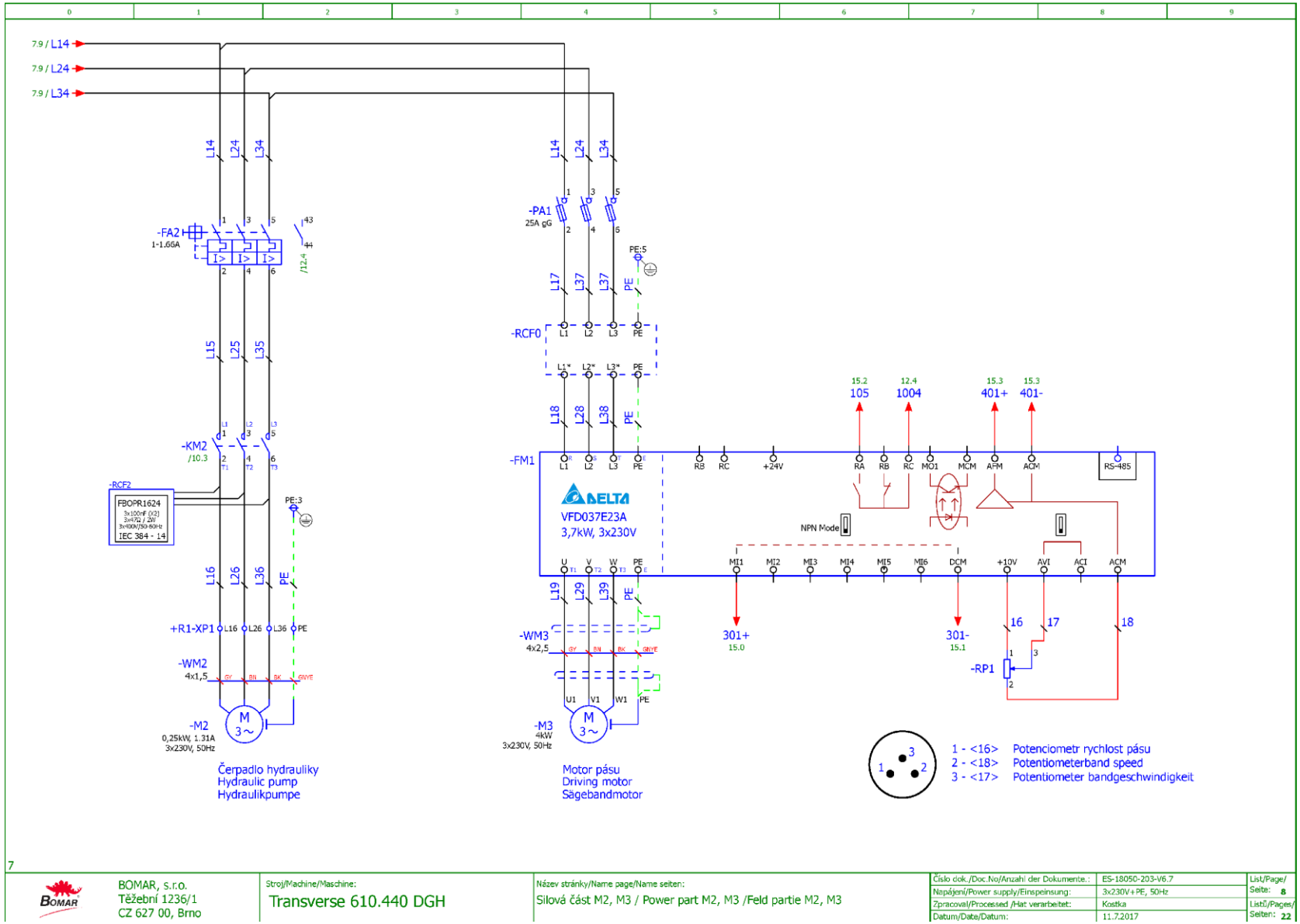

BOMAR, s.r.o. Těžební 1236/1 CZ 627 00, Brno	Stroj/Machine/Maschine: Transverse 610.440 DGH	Název stránky/Name page/Name seiten: Silová část M2, M3 / Power part M2, M3 /Feld partie M2, M3	Číslo dok./Doc.No/Anzahl der Dokumente.: ES-18050-203-V6.7 Napájení/Power supply/Einspeisung: 3x230V+PE, 50Hz Zpracoval/Processed /Hat verarbeitet: Kostka Datum/Date/Datum: 11.7.2017	List/Page/Seite: 8 Listů/Pages/Seiten: 22

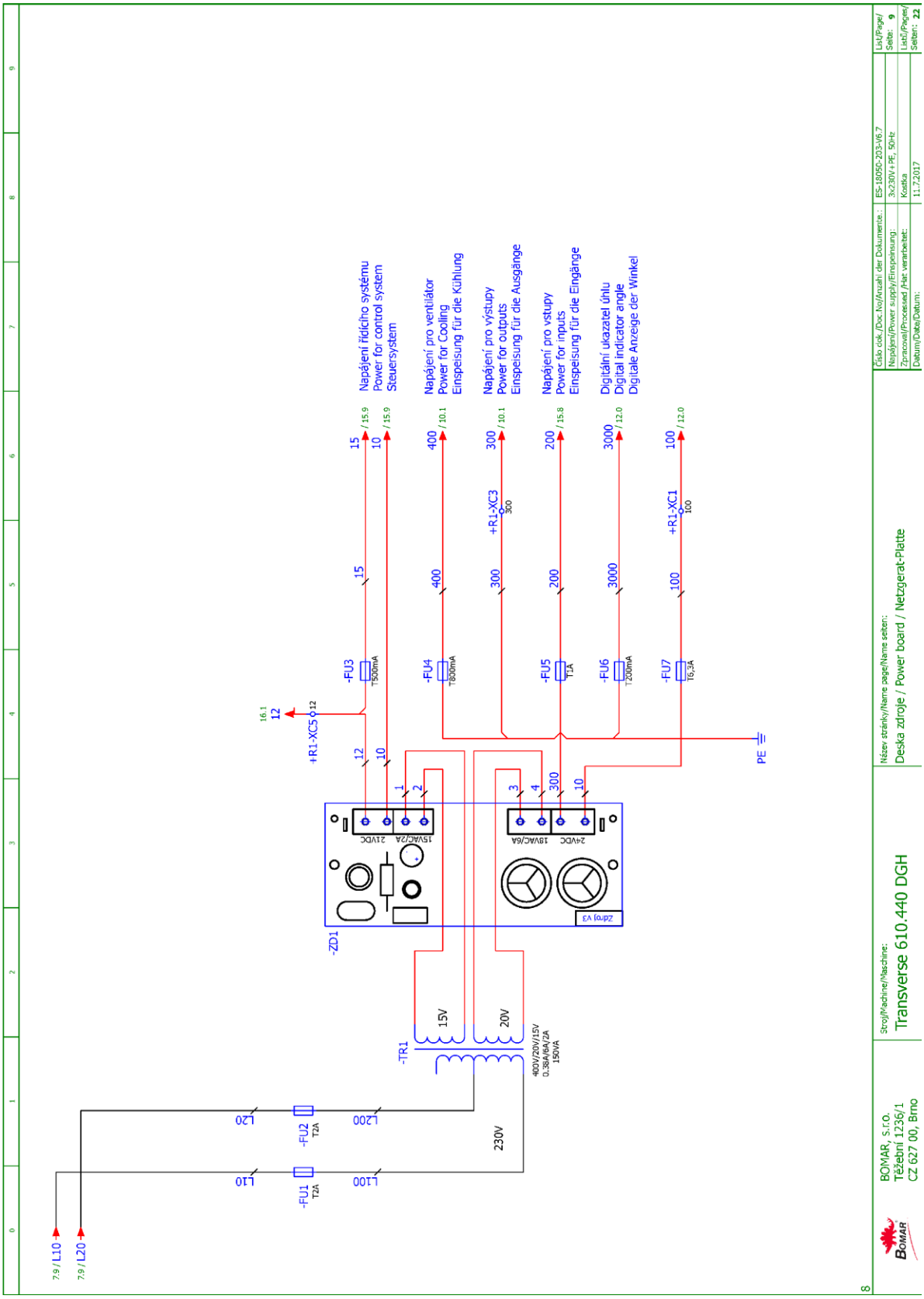
Napájení řídicího systému
Power for control system
Steuersystem
Napájení pro ventilátor
Power for Cooling
Einspeisung für die Kühlung
Napájení pro výstupy
Power for outputs
Einspeisung für die Ausgänge
Napájení pro vstupy
Power for inputs
Einspeisung für die Eingänge
Digitální ukazatel úhlu
Digital indicator angle
Digitale Anzeige der Winkel
-FU3 T500mA
-FU4 T800mA
-FU5 T1A
-FU6 T200mA
-FU7 T6,3A
+R1-XC5
+R1-XC3
+R1-XC1
-ZD1
-TR1
400V/230V/15V
0,38A/6A/2A
150VA
15V
20V
230V
-FU1 T2A
-FU2 T2A
PE
Název stránky/Name page/Name seiten:
Deska zdroje / Power board / Netzgerat-Platte
Stroj/Machine/Maschine:
Transverse 610.440 DGH
BOMAR, S.r.o.
Těžební 1236/1
CZ 627 00, Brno
Číslo dok./Doc. No/Anzahl der Dokumente:
ES-18050-203-V6.7
List/Page/Seite:
9
Listů/Pages/Seiten:
22
Napájení/Power supply/Einspeisung:
3x230V + PE, 50Hz
Zpracoval/Processed /Hat verarbeitet:
Kostka
Datum/Date/Datum:
11.7.2017

Schémata
Schemas
Schematics

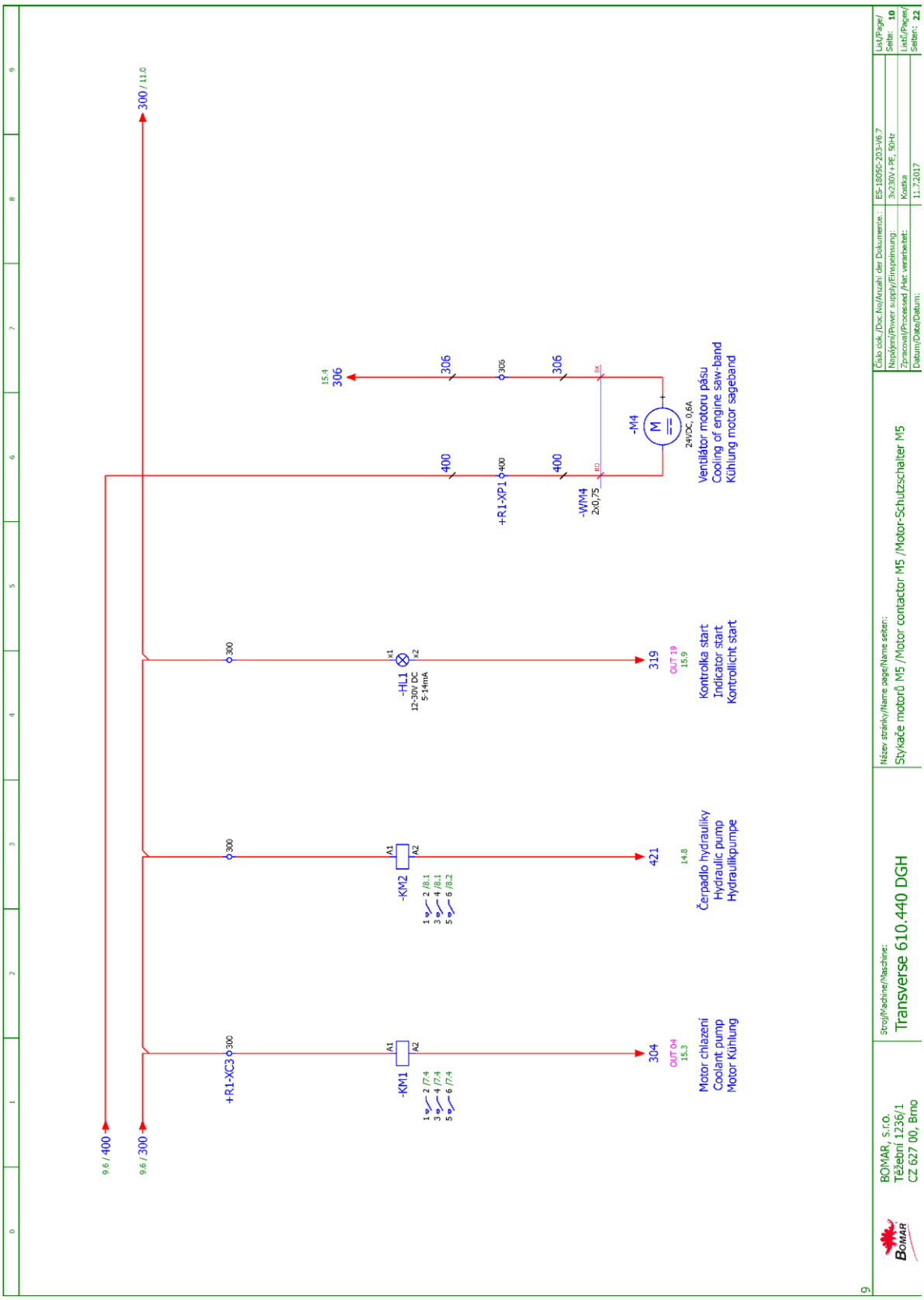

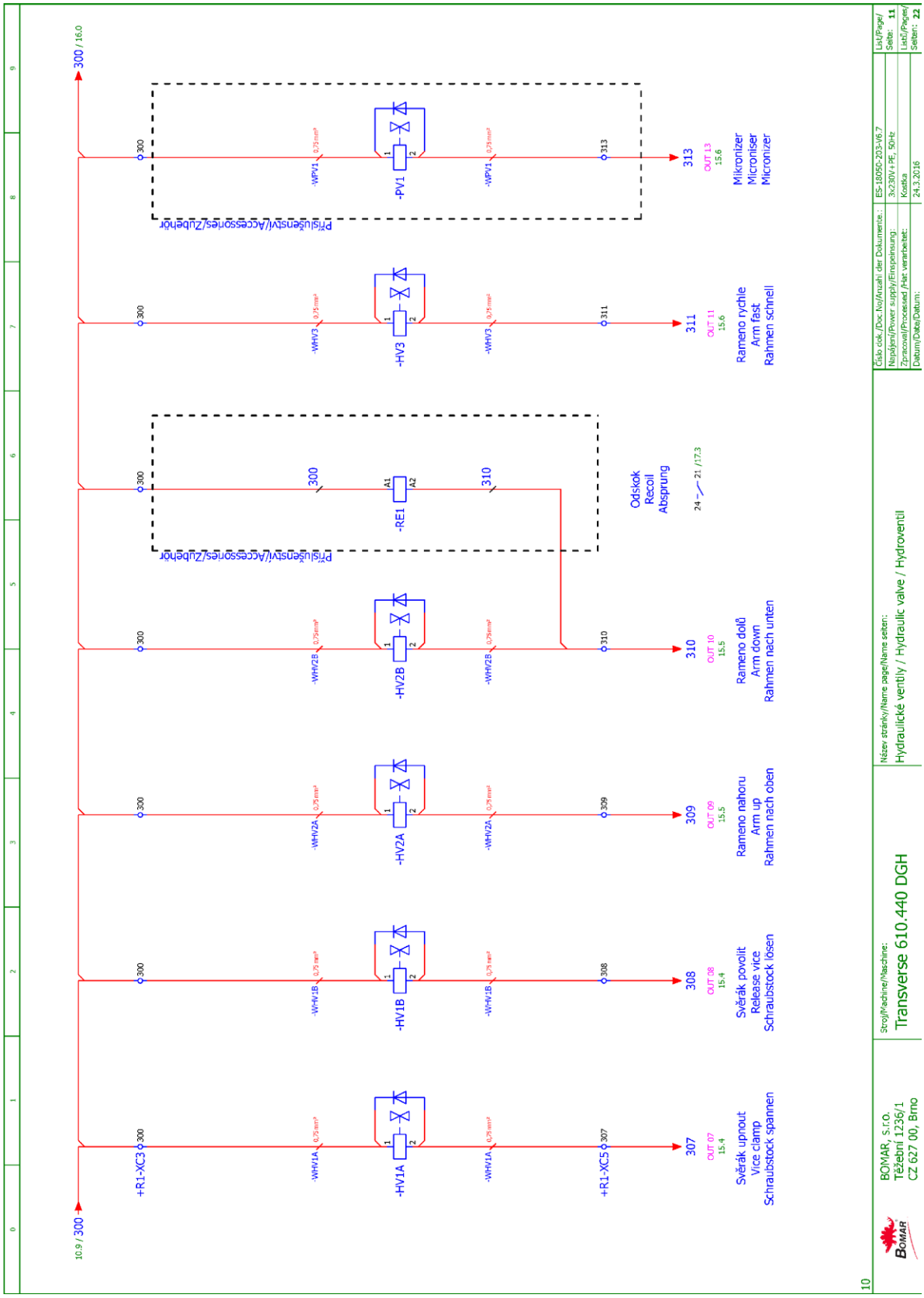
10.9 / 300
300 / 16.0
+R1-XC3
-HV1A
-HV1B
-HV2A
-HV2B
-RE1
-HV3
-PV1
+R1-XC5
Příslušenství/Accessories/Zubehör
Svěrák upnout
Vice clamp
Schraubstock spannen
Svěrák povolit
Release vice
Schraubstock lösen
Rameno nahoru
Arm up
Rahmen nach oben
Rameno dolů
Arm down
Rahmen nach unten
Odskok
Recoil
Absprung
Rameno rychle
Arm fast
Rahmen schnell
Mikronizer
Microniser
Micronizer
BOMAR, s.r.o.
Těžební 1236/1
CZ 627 00, Brno
Stroj/Machine/Maschine:
Transverse 610.440 DGH
Název stránky/Name page/Name seiten:
Hydraulické ventily / Hydraulic valve / Hydroventil
ES-18050-203-V6.7
3x230V + PE, 50Hz
Kostka
24.3.2016
List/Page/Seite: 11
List5/Pages/Seiten: 22

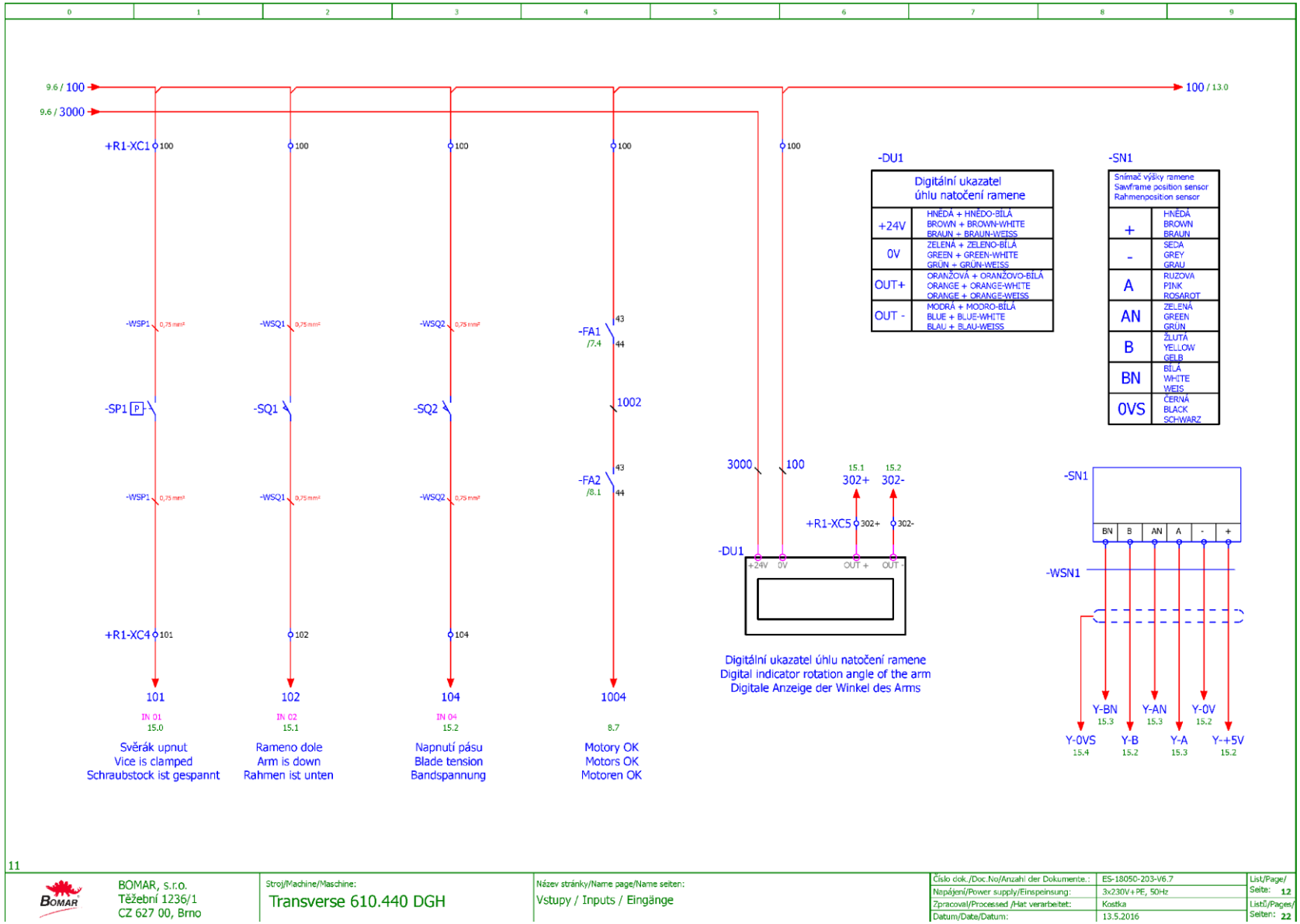

Schémata
Schemas
Schematics

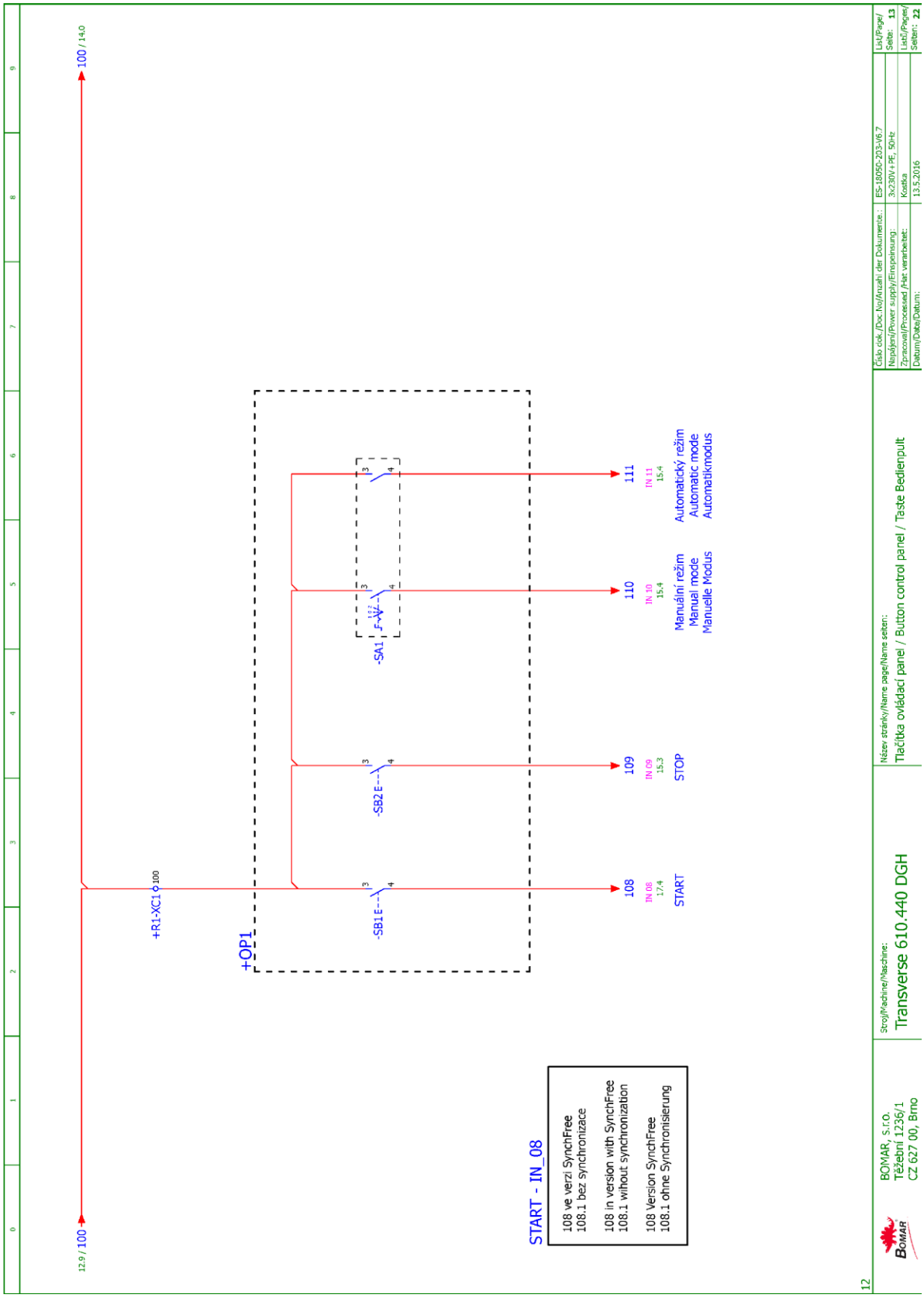
12.9 / 100
100 / 14.0
+R1-XC1 100
+OP1
-SB1 E
-SB2 E
-SA1
108
109
110
111
IN 08
17.4
IN 09
15.3
IN 10
15.4
IN 11
15.4
START
STOP
Manuální režim
Manual mode
Manuelle Modus
Automatický režim
Automatic mode
Automatikmodus
START - IN_08
108 ve verzi SynchFree
108.1 bez synchronizace
108 in version with SynchFree
108.1 without synchronization
108 Version SynchFree
108.1 ohne Synchronisierung
BOMAR, S.r.o.
Těžební 1236/1
CZ 627 00, Brno
Stroj/Machine/Maschine:
Transverse 610.440 DGH
Název stránky/Name page/Name seiten:
Tlačítka ovládací panel / Button control panel / Taste Bedienpult
Číslo zak. /Doc. No/Anzahl der Dokumente:
ES-18050-203-V6.7
List/Page/Seite: 13
Napájení/Power supply/Einspeisung:
3x230V + PE, 50Hz
List/Pages/Seiten: 22
Zpracoval/Processed /Hat verarbeitet:
Kostka
Datum/Date/Datum:
13.5.2016
12

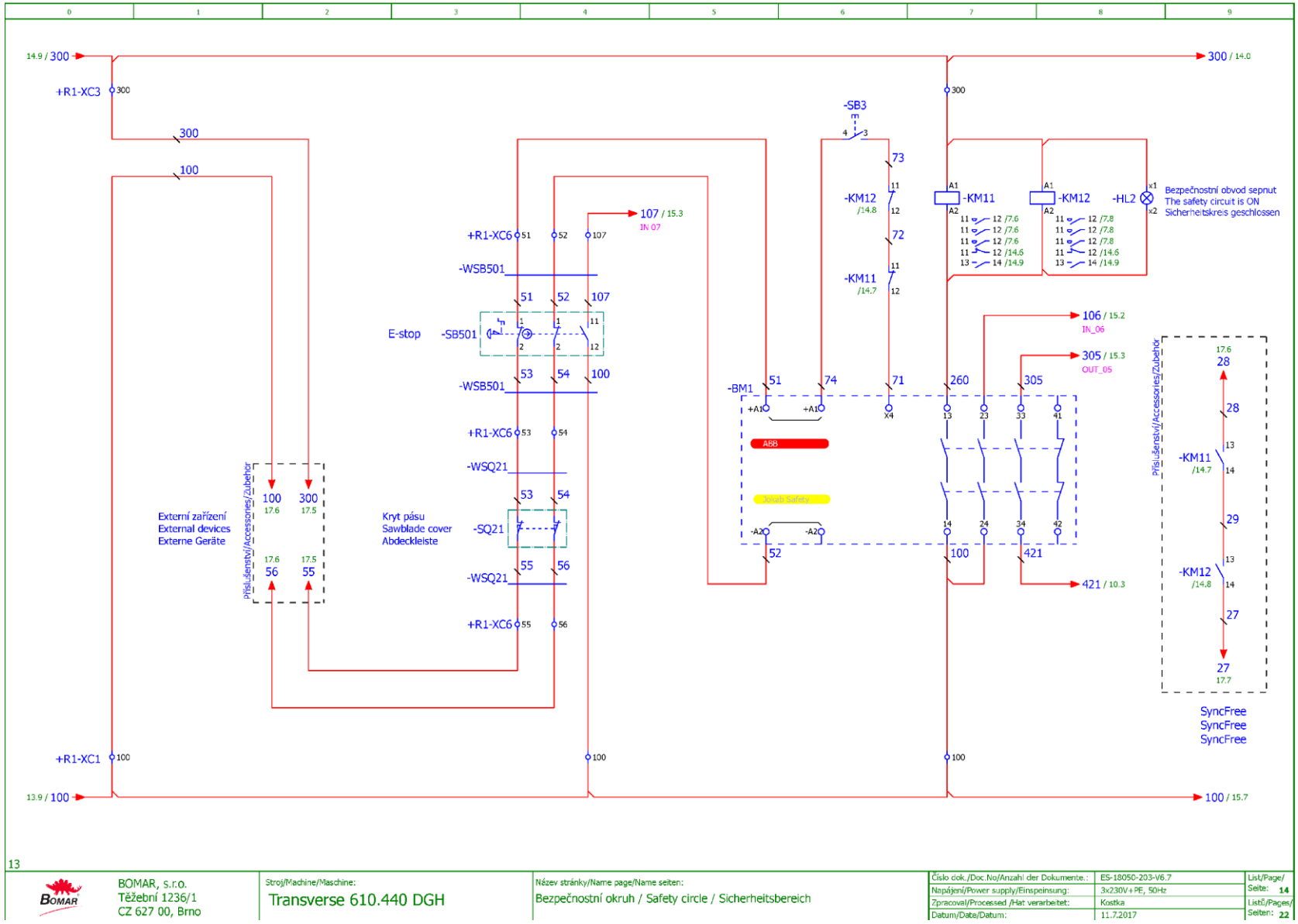

13

BOMAR, s.r.o. Těžební 1236/1 CZ 627 00, Brno	Stroj/Machine/Maschine: Transverse 610.440 DGH	Název stránky/Name page/Name seiten: Bezpečnostní okruh / Safety circle / Sicherheitsbereich	Číslo dok./Doc.No/Anzahl der Dokumente.: ES-18050-203-V6.7 Napájení/Power supply/Einspeisung: 3x230V+PE, 50Hz Zpracoval/Processed /Hat verarbeitet: Kostka Datum/Date/Datum: 11.7.2017	List/Page/Seite: 14 Listů/Pages/Seiten: 22

Schémata
Schemas
Schematics

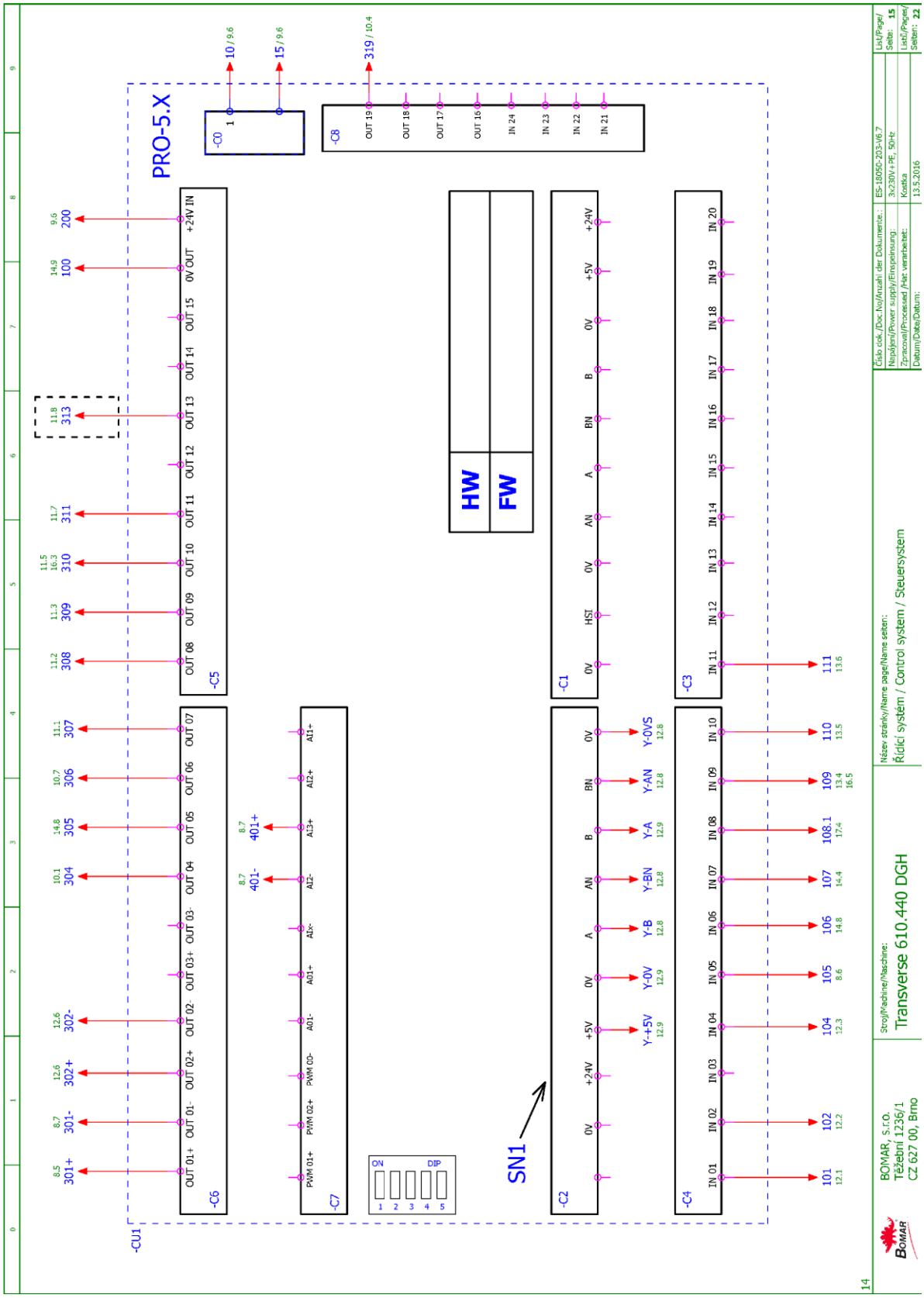
PRO-5.X
-CU1
-C0
-C8
-C5
-C6
-C7
-C1
-C2
-C3
-C4
HW
FW
SN1
DIP
ON
Číslo dok./Doc. No/Anzahl der Dokumente:
ES-18050-203-V6.7
Napájení/Power supply/Einspeisung:
3x230V + PE, 50Hz
Zpracoval/Processed /Hat verarbeitet:
Kostka
Datum/Date/Datum:
13.5.2016
List/Page/
Seite: 15
List/Pages/
Seiten: 22
Název stránky/Name page/Name seiten:
Řídící systém / Control system / Steuersystem
Stroj/Machine/Maschine:
Transverse 610.440 DGH
BOMAR, S.r.o.
Těšební 1236/1
CZ 627 00, Brno
14

Schémata
Schemas
Schematics

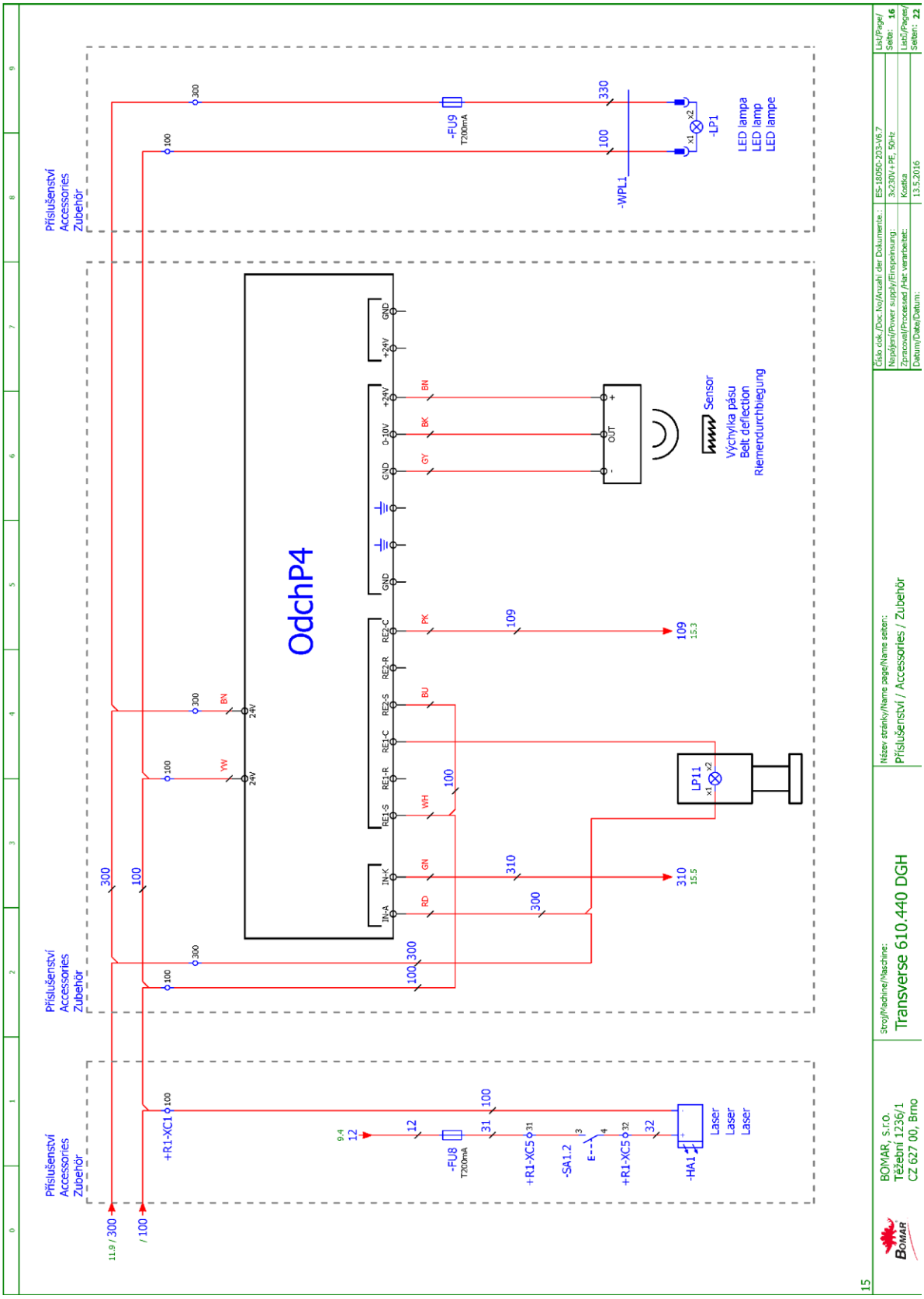

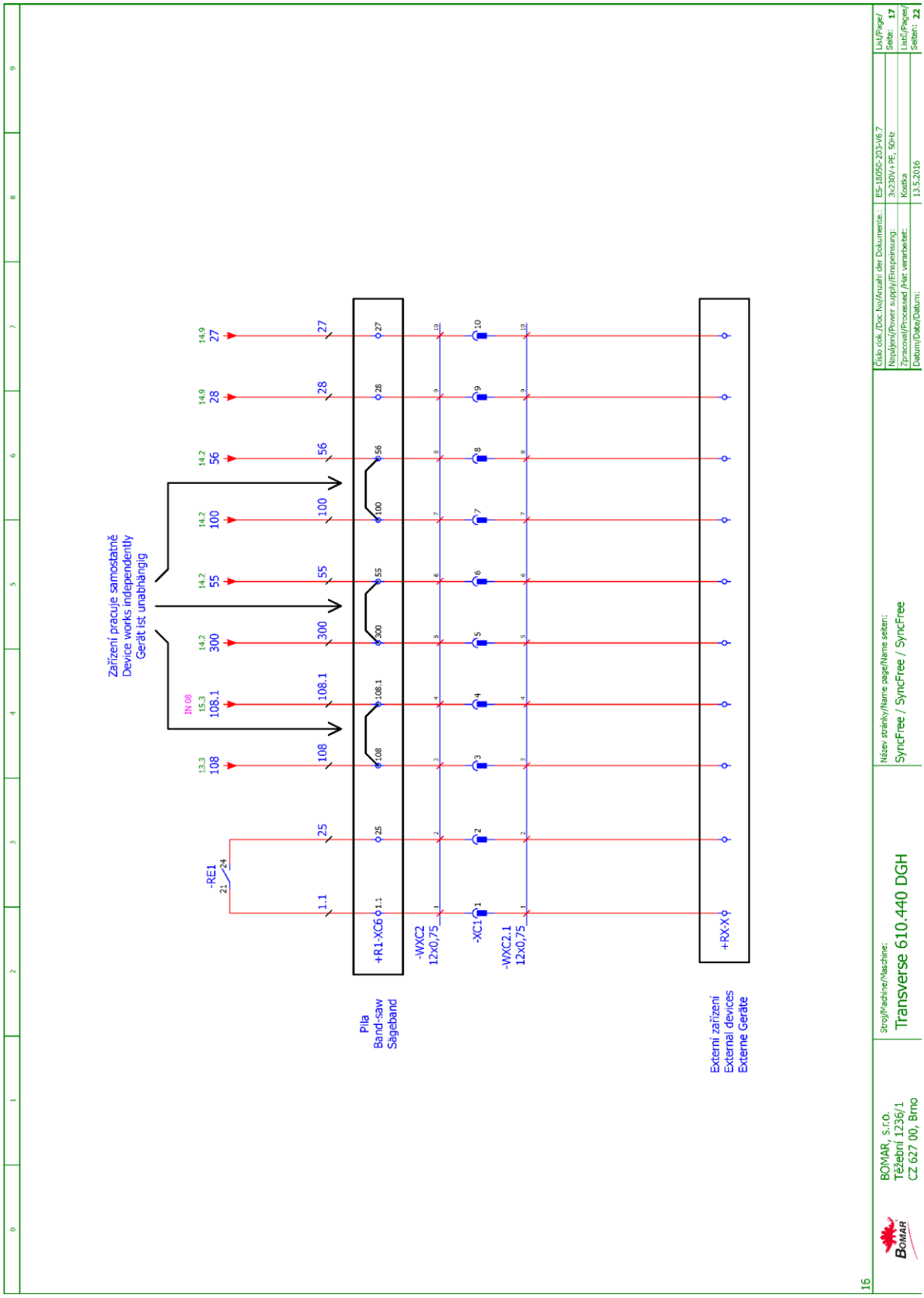
Zařízení pracuje samostatně
Device works independently
Gerät ist unabhängig
IN 08
-RE1
+R1-XC6
-WXC2
12x0,75
-XC1
-WXC2.1
12x0,75
+RX-X
Pila
Band-saw
Sägeband
Externí zařízení
External devices
Externe Geräte
Číslo výk. /Doc. No/Anzahl der Dokumente: ES-18050-203-V6.7
Napájení/Power supply/Einspeisung: 3x230V + PE, 50Hz
Zpracoval/Processed /Hat verarbeitet: Kostka
Datum/Date/Datum: 13.5.2016
List/Page/Seite: 17
List/Pages/Seiten: 22
Stroj/Machine/Maschine:
Transverse 610.440 DGH
Název stránky/Name page/Name seiten:
SyncFree / SyncFree / SyncFree
BOMAR, S.r.o.
Těžební 1236/1
CZ 627 00, Brno
16

6.1.3. Hydraulické schéma / Hydraulikschema / Hydraulic diagram

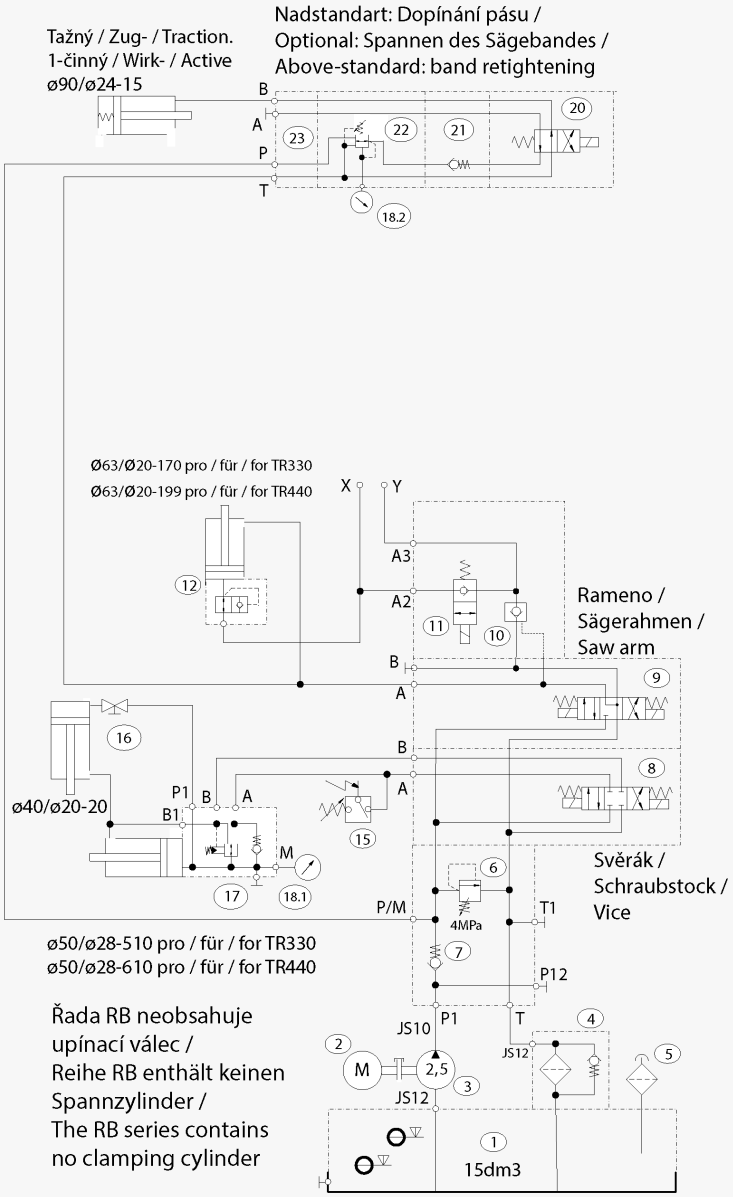

205.1816-100
TRANSVERSE 330 DGH
TRANSVERSE 440DGH
04.11.2013
Platí také pro řadu RB (330,440) /
auch für die Reihe
RB (330,440) gültig /
applies to the
RB (330,440) series as well

Typ / Type / Type	Transverse 330, 440 DGH/ RB 330, 440
Hydraulický agregát / Hydroaggregat / Hydro aggregat	92.001.069, C.f.FMV: S001-059-4, PPM-AC0, 25-PG1/2,5-TM13-CB03-FR
Neuvedené světlosti / Unerwähnt Lichtbreite / Unlisted inside diameters	JS6
Výstupní šroubení / Ausgangschraubung / Output screewing	G1/4“

Pmax	4 MPa
Q	3,3 dm³/min
n	1400 ot./min
P	0,25 kW

Regulační závlek
Stroje velikosti 330 /
Regelungskreis der Anlage für
Andruck in den Schnitt, Größe 330 /
control circuit for the machine size 330

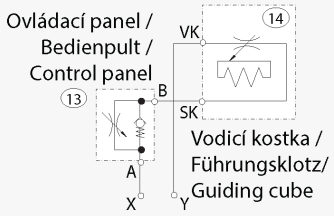

Regulační závlek
Stroje velikosti 440 /
Regelungskreis der Anlage für
Andruck in den Schnitt, Größe 440 /
control circuit for the machine size 440

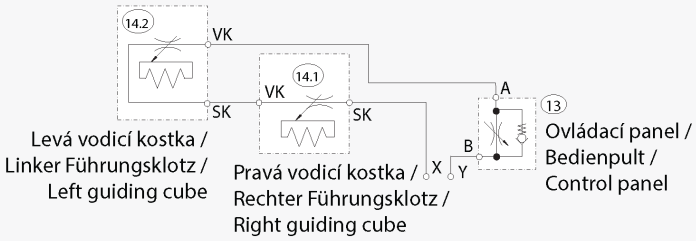

- 2 varianty regulačního závleku okruhu ramena, spojovací body X,Y u strojů velikosti 330 je pouze jedna kostka poz.14/
  2 Varianten des Regelungskreises des Sägerahmens für Andruck in den Schnitt, Verbindungspunkte X, Ybei den Anlage Gr. 280 und 350 ist nur ein Würfel, Pos. 14/
  2 versions of the control circuit of the arm, connecting points X, Y for the machine size 280 and 350, there is only one cube, pos.14
- Regulace upánací síly (prvky č. 16+17+18) jen na přání zákazníka /
  Regelung der Spannkraft (Elemente Nr. 16+17+18) nur auf Wunsch des Kunden /
  Clamping force control (elements No. 16+17+18) by customer's request only

205.1816-100
TRANSVERSE 330 DGH
TRANSVERSE 440DGH
04.11.2013
Platí také pro řadu RB (330,440) /
auch für die Reihe
RB (330,440) gültig /
applies to the
RB (330,440) series as well

Typ / Type / Type	Transverse 330, 440 DGH/ RB 330, 440
Hydraulický agregát / Hydroaggregat / Hydro aggregat	92.001.069, C.f.FMV: S001-059-4, PPM-AC0, 25-PG1/2,5-TM13-CB03-FR
Neuvedené světlosti / Unerwähnt Lichtbreite / Unlisted inside diameters	JS6
Výstupní šroubení / Ausgangschraubung / Output screewing	G1/4"
Pmax	4 MPa
Q	3,3 dm^3/min
n	1400 ot./min
P	0,25 kW

Poz.	Název položky		ks	Číslo skladové položky
Pos.	Bezeichnung		Menge	Artikelnummer im Lagerhaus
Pos.	Item		Pcs.	Stock Item Number
	Nádrž / Behälter / Tank	TM13,5/S, 13dm3	1	
2	Elektromotor / Elektromotor / Electromotor	EM 71 0,25kW/3 B35, 400/230V 50Hz	1	91.001.258
3	Hydrogenerátor / Hydraulikaggregat / Hydrogenerator	10A2,5X053G, 2,5 cm3/ot.	1	92.153.132
4	Zpětný filtr / Filter / Filter	W79	1	92.153.119
5	Nálevací zátka / Stopfen / Plug	CPT-MD-FA/1"	1	92.019.007
6	Přepouštěcí ventil / Bypaßventil / By pas valve	MO – 020/10	1	92.159.001
7	Zpětný ventil / Gegendruckventil / Clack-valve	CVG 14	1	
8	Rozváděč / Verteilungsventil / Distributor	DVE03-S01-B4-C24/20/T1-M1+K1	1	92.101.041
9	Rozváděč / Verteilungsventil / Distributor	DVE03-S04-B5-C24/20/T1-M1+K1	1	92.101.034
10	Hydraulický zámek / Hydraulisches Schloß / Hydraulic lock	PC08-30-0-N	1	92.103.007
11	Rozváděč / Verteilungsventil / Distributor	SV08-20-0-N-24EG,	1	92.101.035
12	Ventil pojistný / Sicherungsventil / Retaining valve	VPNH 1/4"	1	92.151.001
13	Ventil škrtící / Drosselventil / Choke	VS01-04/R2-OS	1	92.152.004
14	Kostka regulace / Regulationklotz / Regulation cube	manual, 251.077	2/1	251.077
15	Tlakový spínač / Druckschalter / Pressure switch	0166415031059, 20-50 bar	1	92.201.003
16	Kulový ventil / Kugelventil / Globe valve		1/0	99.260.004
17	Redukční ventil / Reduktionsventil / Control valve	VRN2-06/S-6R (252.001)	1/0	92.154.001
18	Manometr / Manometer / Manometer	D68, RAD., 0-60 bar	1/0	
19				
20	Rozváděč / Verteilungsventil / Distributor	RPE3-042R11/02400E1K1	1/0	92.101.001
21	Jednosměrný ventil / Einwegventil / One-way valve	VJ01-04/MP-30	1/0	92.104.001
22	Redukční ventil / Reduktionsventil / Control valve	VRP-04-PS/6,3	1/0	92.154.003
23	Deska / Platte / Plate	DK1-04/32-2	1/0	92.105.008

7. Výkresy sestav pro objednání náhradních dílů / Zeichnungen für Bestellung der Ersatzteile / Drawing assemblies for spare parts order

- Při objednávání náhradních dílů vždy uvádějte: typ stroje (např. Practix 285.230 G manual) , výrobní číslo (např. 125) a rok výroby (např. 1999).

- In die Bestellung der Ersatzteile führen Sie immer an: Maschinentyp (z. B. Practix 285.230 G manual), Serien Nr. (z. B. 125) und Baujahr (z. B. 1999).

- For spare parts order, you must always to allege: type of machine (for example Practix 285.230 G manual), serial number (for example 125, see cover page) and year of construction (for example 1999).

7.1. Transverse 610.440 DGH

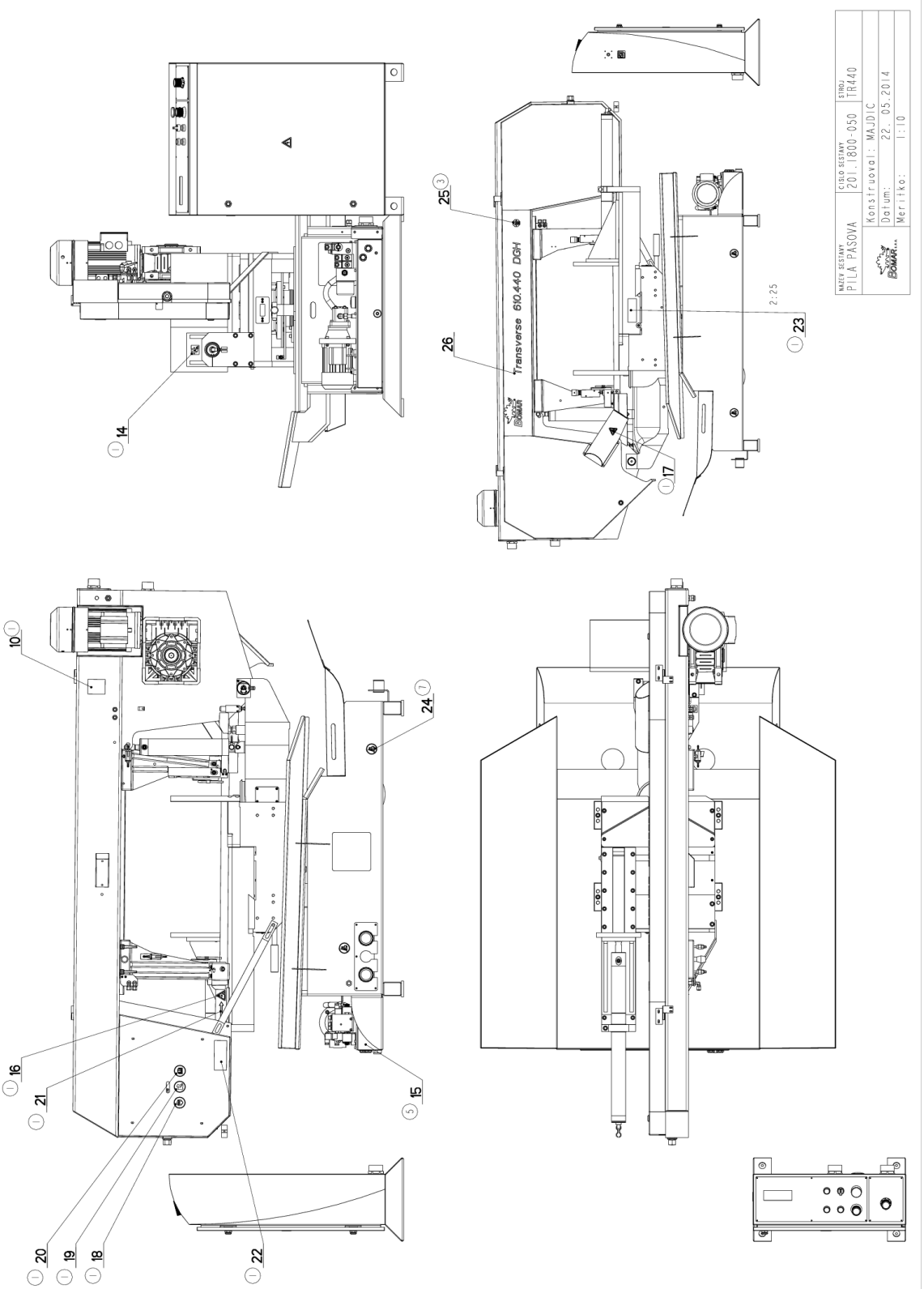

7.2. Kusovník / Piece list / Stückliste - Transverse 610.440 DGH

Cislo Sestavy	Ver.	Nazev sestavy
201.1800-050	7	PILA PASOVA/BAND SAW/BANDSÄGE

Poz.	Objednaci cislo	Ver.	Nazev polozky	Rozmer	Ks
1	201.1801-600 (5)	3	PODSTAVEC / BASE / UNTERSATZ	SESTAVA	1
2	201.1802-000	3	KONZOLA OTOCNA / TURNABLE CONSOL / DREHKONSOLE		1
3	201.1803-000	2	SVERAK / VICE / SCHRAUBSTOCK		1
4	201.1809-000	0	PODSTAVEC SVERAKU / VICE BASE / SCHRAUBSTOCKUNTERSATZ		1
5	201.1830-000 (6)	1	OVLADACI PANEL / CONTROL PANEL / BEDIENPULT		1
6	201.4804-050	9	RAMENO / SHOULDER / SÄGERAHMEN		1
7	201.4807-200 (3)	4	VALEC ZVEDACI / LIFTING CYLINDER / HEBEZYLINDER		1
8	30.1800-052 (5)	0	DRZAK / HOLDER / HALTER	P 5x30	1
9	30.1814-158 (7)	0	KRYT PASU / BELT COVER / BANDABDECKUNG		1
10	30.1899-002 (5)	0	STITEK / LABEL / SCHILD	P 0.5x65	1
11	30.9307-109	1	DRZAK / HOLDER / HALTER	HR 25x4	2
12	30.M201-005 (5)	2	DRZAK / HOLDER / HALTER	P 4x173	1
13	30.M201-006 (5)	2	DRZAK / HOLDER / HALTER	P 4x173	1
14	31.3199-005 (1)	0	SAMOLEPKA / STICKER / AUFKLEBER		1
15	92.001.069 (5)	0	AGREGAT HYDRAULICKY / HYDRAULIC GENERATOR / HYDRAULIKAGGREGAT	FMV	1
16	99.900.040 (1)	0	SAMOLEPKA / STICKER / AUFKLEBER		1
17	99.900.043 (1)	0	SAMOLEPKA / STICKER / AUFKLEBER		1
18	99.900.047 (1)	0	SAMOLEPKA / STICKER / AUFKLEBER		1
19	99.900.048 (1)	0	SAMOLEPKA / STICKER / AUFKLEBER		1
20	99.900.049 (1)	0	SAMOLEPKA / STICKER / AUFKLEBER		1
21	99.900.053 (1)	0	SAMOLEPKA / STICKER / AUFKLEBER		1
22	99.900.055 (1)	0	SAMOLEPKA / STICKER / AUFKLEBER		1
23	99.900.056 (1)	0	SAMOLEPKA / STICKER / AUFKLEBER		1
24	99.900.068 (7)	0	SAMOLEPKA / STICKER / AUFKLEBER	pouziti vysokozvizneno vozikku	4
25	99.901.032 (3)	0	SAMOLEPKA / STICKER / AUFKLEBER	CETIFIKACNI SAMOLEPKA	1
26	99.901.070	0	SAMOLEPKA / STICKER / AUFKLEBER		1

1.DOPL.BEZPECNOSTNI STITKY- 1x99.900.040,1x99.900.043,1x99.900.046,1x99.900.047,1x99.900.048,1x99.900.049,1x99.900.053,1x99.900.055,1x99.900.056, 1x31.3199-005,1xTYPOVY STITEK 31.1899-105. 324/ZM389 18.10.2007 SLEZACKOVA
2.DOPLNEN STITEK RYCHLOSTI PASU 30.0599-008. 367/ZM011 17.1.2008 SLEZACKOVA
3.PRID.CERTIFIKACNI SAMOLEPKA 99.901.032,ZRUS.VALEC 201.4807-000 A NAHR.201.4807-200. 071/ZM265 4.10.2010 SLEZACKOVA
4.PRIDAN KRYT PASU 30.1814-108. 071/ZM22 25.7.2012 SLEZACKOVA
5.ZRUS. PODSTAVCE 201.1801-000 NAHR.201.1801-600,ZRUS.OVL.PANEL+ROZVAD. 201.1814-020 NAHR.201.R230-300,ZRUS.CHLAZENI 201.1806-000, ZRUS.TYPOVY STITEK 31.1899-105 A NAHR.30.1899-002,PRID DRZAKK 30.1800--052,30.M201-005,30.M201-006. 095/ZM112 29.03.2013 MAJDIC
6.ZRUSEN OVLADACI PANEL 201.R230-300 A NAHR.201.1830-000. 264/ZM275 16.12.2013 SLEZACKOVA
7.ZRUS.KRYT PASU 30.1814-108 A NAHR.30.1814-158,PRIDANA 4xSAMOLEPKA 99.900.068. 090/ZM111 22.5.2014 SLEZACKOVA

Cislo Sestavy/Number of assembly/Nummer der Baugruppe; Verze (Ver.)/Version/Version; Nazev sestavy/Assembly title/Name der Baugruppe; Pozice (Poz.)/Position/Position; Objednaci cislo/Purchase order number/Bestellnummer; Nazev polozky/Volume title/Name der Position; Rozmer/Stock size/Abmessung

7.3. Transverse 610.440 DGH

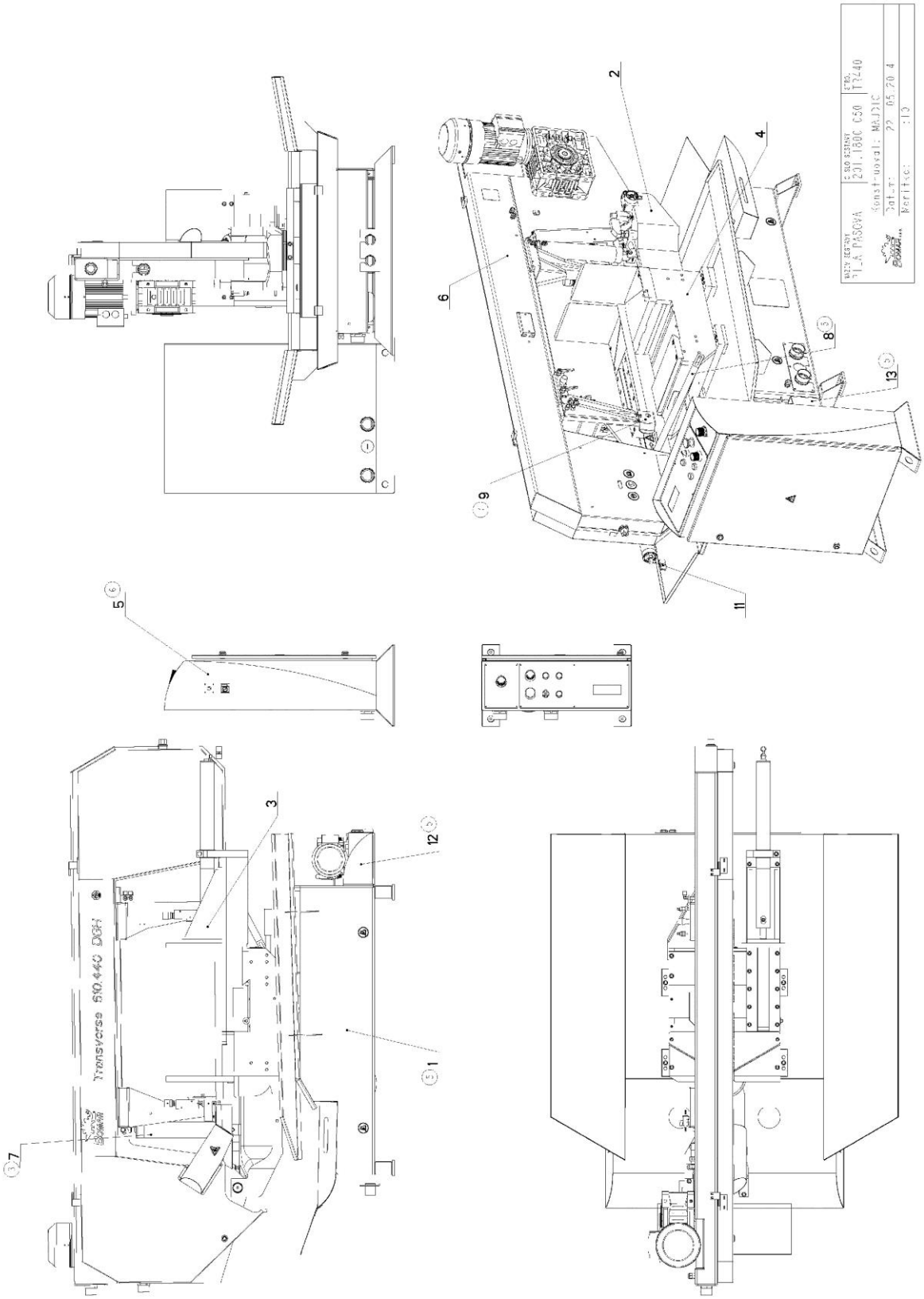

7.4. Kusovník / Piece list / Stückliste - Transverse 610.440 DGH

Cislo Sestavy	Ver.	Nazev sestavy
201.1800-050	7	PILA PASOVA/BAND SAW/BANDSÄGE

Poz.	Objednaci cislo	Ver.	Nazev polozky	Rozmer	Ks
1	201.1801-600 (5)	3	PODSTAVEC / BASE / UNTERSATZ	SESTAVA	1
2	201.1802-000	3	KONZOLA OTOCNA / TURNABLE CONSOL / DREHKONSOLE		1
3	201.1803-000	2	SVERAK / VICE / SCHRAUBSTOCK		1
4	201.1809-000	0	PODSTAVEC SVERAKU / VICE BASE / SCHRAUBSTOCKUNTERSATZ		1
5	201.1830-000 (6)	1	OVLADACI PANEL / CONTROL PANEL / BEDIENPULT		1
6	201.4804-050	9	RAMENO / SHOULDER / SÄGERAHMEN		1
7	201.4807-200 (3)	4	VALEC ZVEDACI / LIFTING CYLINDER / HEBEZYLINDER		1
8	30.1800-052 (5)	0	DRZAK / HOLDER / HALTER	P 5x30	1
9	30.1814-158 (7)	0	KRYT PASU / BELT COVER / BANDABDECKUNG		1
10	30.1899-002 (5)	0	STITEK / LABEL / SCHILD	P 0.5x65	1
11	30.9307-109	1	DRZAK / HOLDER / HALTER	HR 25x4	2
12	30.M201-005 (5)	2	DRZAK / HOLDER / HALTER	P 4x173	1
13	30.M201-006 (5)	2	DRZAK / HOLDER / HALTER	P 4x173	1
14	31.3199-005 (1)	0	SAMOLEPKA / STICKER / AUFKLEBER		1
15	92.001.069 (5)	0	AGREGAT HYDRAULICKY / HYDRAULIC GENERATOR / HYDRAULIKAGGREGAT	FMV	1
16	99.900.040 (1)	0	SAMOLEPKA / STICKER / AUFKLEBER		1
17	99.900.043 (1)	0	SAMOLEPKA / STICKER / AUFKLEBER		1
18	99.900.047 (1)	0	SAMOLEPKA / STICKER / AUFKLEBER		1
19	99.900.048 (1)	0	SAMOLEPKA / STICKER / AUFKLEBER		1
20	99.900.049 (1)	0	SAMOLEPKA / STICKER / AUFKLEBER		1
21	99.900.053 (1)	0	SAMOLEPKA / STICKER / AUFKLEBER		1
22	99.900.055 (1)	0	SAMOLEPKA / STICKER / AUFKLEBER		1
23	99.900.056 (1)	0	SAMOLEPKA / STICKER / AUFKLEBER		1
24	99.900.068 (7)	0	SAMOLEPKA / STICKER / AUFKLEBER	pouziti vysokozvizneno vozikku	4
25	99.901.032 (3)	0	SAMOLEPKA / STICKER / AUFKLEBER	CETIFIKACNI SAMOLEPKA	1
26	99.901.070	0	SAMOLEPKA / STICKER / AUFKLEBER		1

1.DOPL.BEZPECNOSTNI STITKY- 1x99.900.040,1x99.900.043,1x99.900.046,1x99.900.047,1x99.900.048,1x99.900.049,1x99.900.053,1x99.900.055,1x99.900.056, 1x31.3199-005,1xTYPOVY STITEK 31.1899-105. 324/ZM389 18.10.2007 SLEZACKOVA
2.DOPLNEN STITEK RYCHLOSTI PASU 30.0599-008. 367/ZM011 17.1.2008 SLEZACKOVA
3.PRID.CERTIFIKACNI SAMOLEPKA 99.901.032,ZRUS.VALEC 201.4807-000 A NAHR.201.4807-200. 071/ZM265 4.10.2010 SLEZACKOVA
4.PRIDAN KRYT PASU 30.1814-108. 071/ZM22 25.7.2012 SLEZACKOVA
5.ZRUS. PODSTAVCE 201.1801-000 NAHR.201.1801-600,ZRUS.OVL.PANEL+ROZVAD. 201.1814-020 NAHR.201.R230-300,ZRUS.CHLAZENI 201.1806-000, ZRUS.TYPOVY STITEK 31.1899-105 A NAHR.30.1899-002,PRID DRZAKK 30.1800--052,30.M201-005,30.M201-006. 095/ZM112 29.03.2013 MAJDIC
6.ZRUSEN OVLADACI PANEL 201.R230-300 A NAHR.201.1830-000. 264/ZM275 16.12.2013 SLEZACKOVA
7.ZRUS.KRYT PASU 30.1814-108 A NAHR.30.1814-158,PRIDANA 4xSAMOLEPKA 99.900.068. 090/ZM111 22.5.2014 SLEZACKOVA

Cislo Sestavy/Number of assembly/Nummer der Baugruppe; Verze (Ver.)/Version/Version; Nazev sestavy/Assembly title/Name der Baugruppe; Pozice (Poz.)/Position/Position; Objednaci cislo/Purchase order number/Bestellnummer; Nazev polozky/Volume title/Name der Position; Rozmer/Stock size/Abmessung

7.5. Podstavec / Base / Untersatz

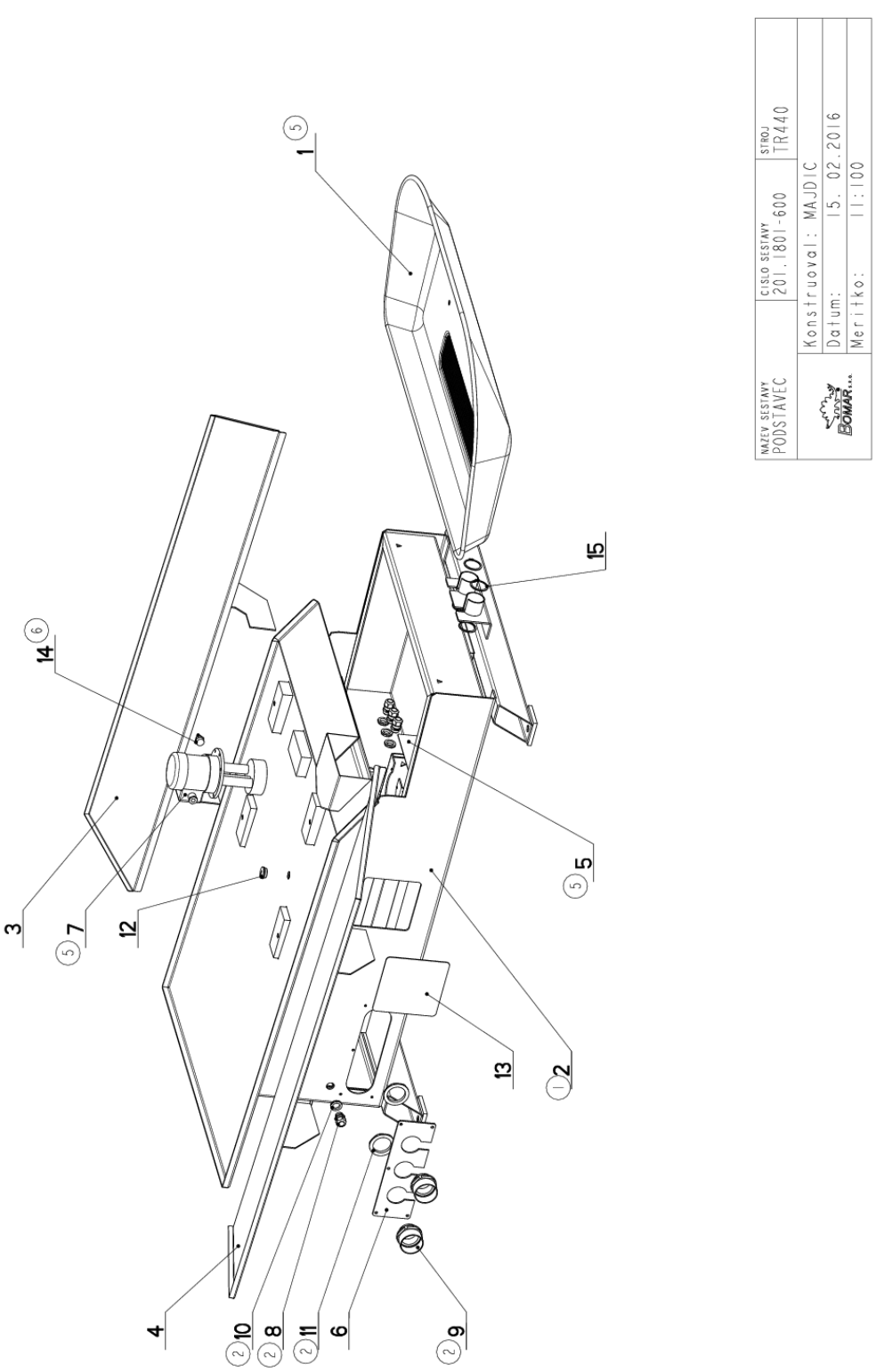

7.6. Kusovník / Piece list / Stückliste - Podstavec / Base / Untersatz

Cislo Sestavy	Ver.	Nazev sestavy
201.1801-600	6	PODSTAVEC/BASE/UNTERSATZ

Poz.	Objednaci cislo	Ver.	Nazev polozky	Rozmer	Ks
1	201.M201-020 (5)	0	VANA / TANK / WANNE		1
2	30.1801-201 (1)	4	PODSTAVEC / BASE / UNTERSATZ		1
3	30.1801-602	1	OKAP / GUTTER CHANNEL / BLECH	SVARENEC	1
4	30.1801-603	1	OKAP / GUTTER CHANNEL / BLECH	SVARENEC	1
5	30.M201-015 (5)	0	PLECH / PLATE / BLECH	P 1,5x119	1
6	30.R201-056	1	VIKO / COVER / DECKEL	P 4x100	1
7	91.020.032 (5)	0	CERPADLO CHLAZENI / COOLING PUMP / KÜHLMITTELPUMPE	230/400V	1
8	91.070.012 (2)	0	VYVODKA / BUSHING / TULLE		4
9	91.071.022 (2)	0	VYVODKA / BUSHING / TÜLLE		2
10	91.072.012 (2)	0	MATICE / NUT / MUTTER		4
11	91.072.016 (2)	0	MATICE / NUT / MUTTER		2
12	91.074.013	0	UCPAVKA / PLUG / STOPFEN	M25x1,5	1
13	94.101.039	0	ZASLEPKA / PLUG / BLINDFLANSCH	154x154x4	1
14	94.202.020 (6)	0	REDUKCE / REDUCTION / ADAPTOR / REDUKTION	1/2"-6	1
15	95.800.016	0	SEGR HRIDEL. / OUTSIDE SAFETY RING / SICHERUNGSRING AUSSEN	POJISTNY KROUZEK 42	4

1.ZRUSEN PODSTAVEC 30.1801-601 A NAHR.30.1801-201. 084/ZM170 11.6.2013 SLEZACKOVA

2.PRID.3xMATICE M50x1.5 91.072.016,3xVYVODKA M50x1.5 91.071.022,1xVYVODKA M20x1.5 91.070.012,1xMATICE M20x1.5 91.072.012 095/ZM264 1.11.2013 SLEZACKOVA

3.ZRUSENA 1xMATICE M50x1.5 91.072.016,1xVYVODKA M50x1.5 91.071.022. 284/ZM275 16.12.2013 SLEZACKOVA

4.PRIDAN KRYT 30.M201-014. 222/ZM281 14.12.2015 SLEZACKOVA

5.ZRUS.VANA 30.M201-010 A NAHR.201.M201-020,ZRUS.CERPADLO 91.020.004 A NAHR.91.020.032,ZRUS.PLECH 30.M201-014 A NAHR.30.M201-015,PRIDANA REDUKCE 94.202.021. 024/ZM046 15.2.2016 SLEZACKOVA

6.ZRUS.REDUKCE 94.202.021 A NAHR.94.202.020. 024/ZM200 11.7.2016 SLEZACKOVA

Cislo Sestavy/Number of assembly/Nummer der Baugruppe; Verze (Ver.)/Version/Version; Nazev sestavy/Assembly title/Name der Baugruppe; Pozice (Poz.)/Position/Position; Objednaci cislo/Purchase order number/Bestellnummer; Nazev polozky/Volume title/Name der Position; Rozmer/Stock size/Abmessung

7.7. Vana/ Tank/ Wanne

Cislo Sestavy	Ver.	Nazev sestavy
201.M201-020	0	VANA/TANK/WANNE

Poz.	Objednaci cislo	Ver.	Nazev polozky	Razmer	Ks
1	30.ER251-304	0	SITO / SIEVE / GITTERWERK	P1x95	1
2	30.M201-021	0	VANA / TANK / WANNE	P 0.8	1

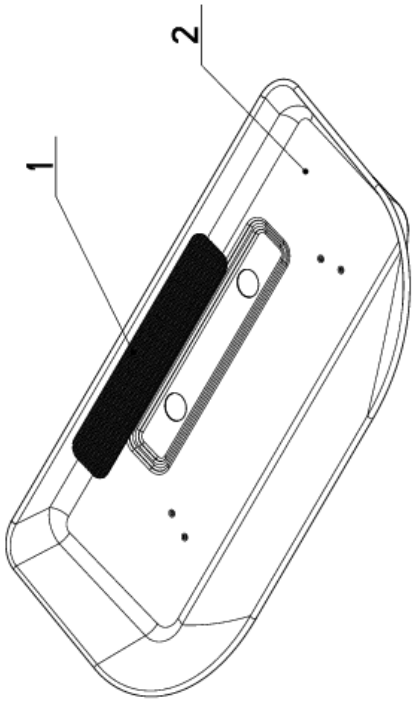

Cisla Sestavy/Number of assembly/Nummer der Baugruppe; Verze (Ver.)/Version/Version; Nazev sestavy/Assembly title/Name der Baugruppe; Pozice (Poz.)/Position/Position;
Objednaci cislo/Purchase order number/Bestellnummer; Nazev polozky/Volume title/Name der Position; Rozmer/Stock size/Abmessung

7.8. Konzola otočná / Turnable consol / Drehkonsole

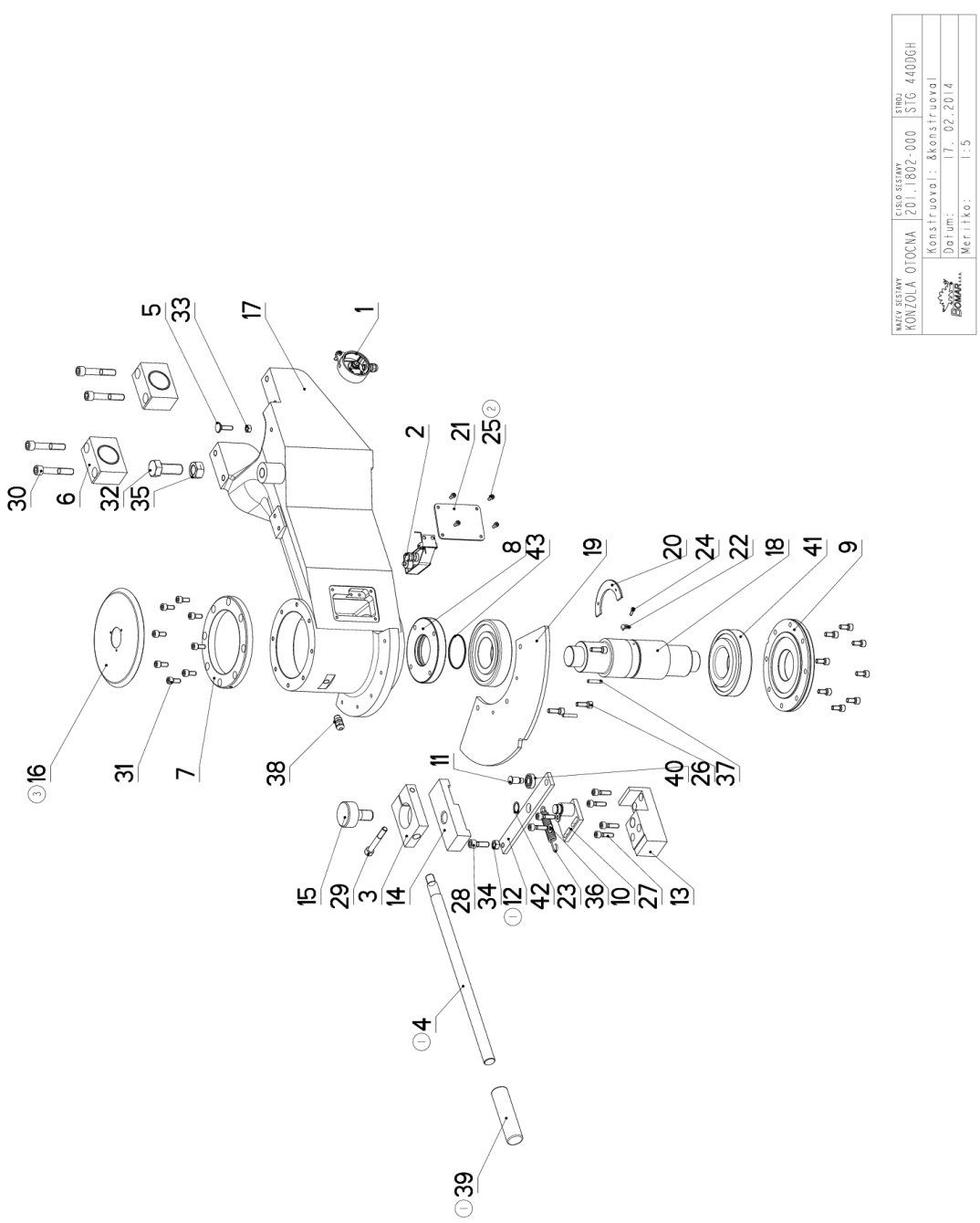

7.9. Kusovník / Piece list / Stückliste - Konzola otočná / Turnable consol / Drehkonsole

Cislo Sestavy	Ver.	Nazev sestavy
201.1802-000	3	KONZOLA OTOCNA/TURNABLE CONSOL/DREHKONSOLE

Poz.	Objednaci cislo	Ver.	Nazev polozky	Rozmer	Ks
1	201.0614-200	0	ODMEROVANI / MEASURING / GEHRUNGSMESSUNG		1
2	201.2902-200	0	SNIMAC / SENSOR / SENSOR		1
3	30.0702-004	0	DRZAK / HOLDER / HALTER	HR 70x 20	1
4	30.0702-007 (1)	1	TYC / LEVER / HEBEL	d22	1
5	30.0702-013	0	SROUB / BOLT / SCHRAUBE	M8	1
6	30.0802-002	1	LOZISKO / BEARING / LAGER		2
7	30.0802-004	1	VIKO / COVER / DECKEL	VYPALEK	1
8	30.0802-005	1	MATICE / NUT / MUTTER	D130	1
9	30.0802-006	1	VIKO / COVER / DECKEL	d 180	1
10	30.0802-010	2	CEP / LUG / BOLZEN		1
11	30.0802-011	0	CEP / LUG / BOLZEN	d16	1
12	30.0802-013 (1)	0	PAKA / LEVER / HEBEL	HR 30 x 8	1
13	30.0809-007	0	KOSTKA / CUBE / WÜRFEL	HR 50 x 50	1
14	30.0809-008	0	UPINKA / FASTENER / SPANNEISEN	HR 50 x 30	1
15	30.0809-009	0	SROUB / BOLT / SCHRAUBE	d 50	1
16	30.1802-105 (3)	0	KRYT / COVER / ABDECKUNG	P 1x200	1
17	30.2902-001	2	KONZOLA OTOCNA / TURNABLE CONSOL / DREHKONSOLE	ODLITEK	1
18	30.2902-003	1	CEP / LUG / BOLZEN	d 75	1
19	30.2902-007	0	KOTOUC ODMEROVANI / MEASURING DISC / MESSSCHEIBE	P 8x190	1
20	30.2902-010	0	SEGMENT / SEGMENT / SEGMENT	P 3x108	1
21	30.2902-111	1	KRYT / COVER / ABDECKUNG	P 3x74	1
22	30.2902-112	0	DRZAK / HOLDER / HALTER	P 2x10	2
23	31.0206-005	0	PRUZINA / SPRING / FEDER	2.50x16x90x27	1
24	90.001.25.003	0	SROUB IMBUS / ALLEN HEAD BOLT / IMBUSSCHRAUBE	M4X12	2
25	90.001.25.007 (2)	0	SROUB IMBUS / ALLEN HEAD BOLT / IMBUSSCHRAUBE	M5X10	4
26	90.001.25.033	0	SROUB IMBUS / ALLEN HEAD BOLT / IMBUSSCHRAUBE	8x25	3
27	90.001.25.034	0	SROUB IMBUS / ALLEN HEAD BOLT / IMBUSSCHRAUBE	M8X30	6
28	90.001.25.048	0	SROUB IMBUS / ALLEN HEAD BOLT / IMBUSSCHRAUBE	M10X30	1
29	90.001.25.055	0	SROUB IMBUS / ALLEN HEAD BOLT / IMBUSSCHRAUBE	M10X70	1
30	90.001.25.064	0	SROUB IMBUS / ALLEN HEAD BOLT / IMBUSSCHRAUBE	M12X70	4
31	90.001.25.105	0	SROUB IMBUS / ALLEN HEAD BOLT / IMBUSSCHRAUBE	M8X18	16
32	90.005.55.050	0	SROUB 6HRANNY / 6 SIDED BOLT / SECHSKANTSCHRAUBE	SROUB M20X50	1
33	90.100.55.005	0	MATICE / NUT / MUTTER	MATICE _ M8	1
34	90.100.55.006	0	MATICE / NUT / MUTTER	MATICE _ M10	1

Cislo Sestavy/Number of assembly/Nummer der Baugruppe; Verze (Ver.)/Version/Version; Nazev sestavy/Assembly title/Name der Baugruppe; Pozice (Poz.)/Position/Position; Objednaci cislo/Purchase order number/Bestellnummer; Nazev polozky/Volume title/Name der Position; Rozmer/Stock size/Abmessung

7.10. Konzola otočná / Turnable consol / Drehkonsole

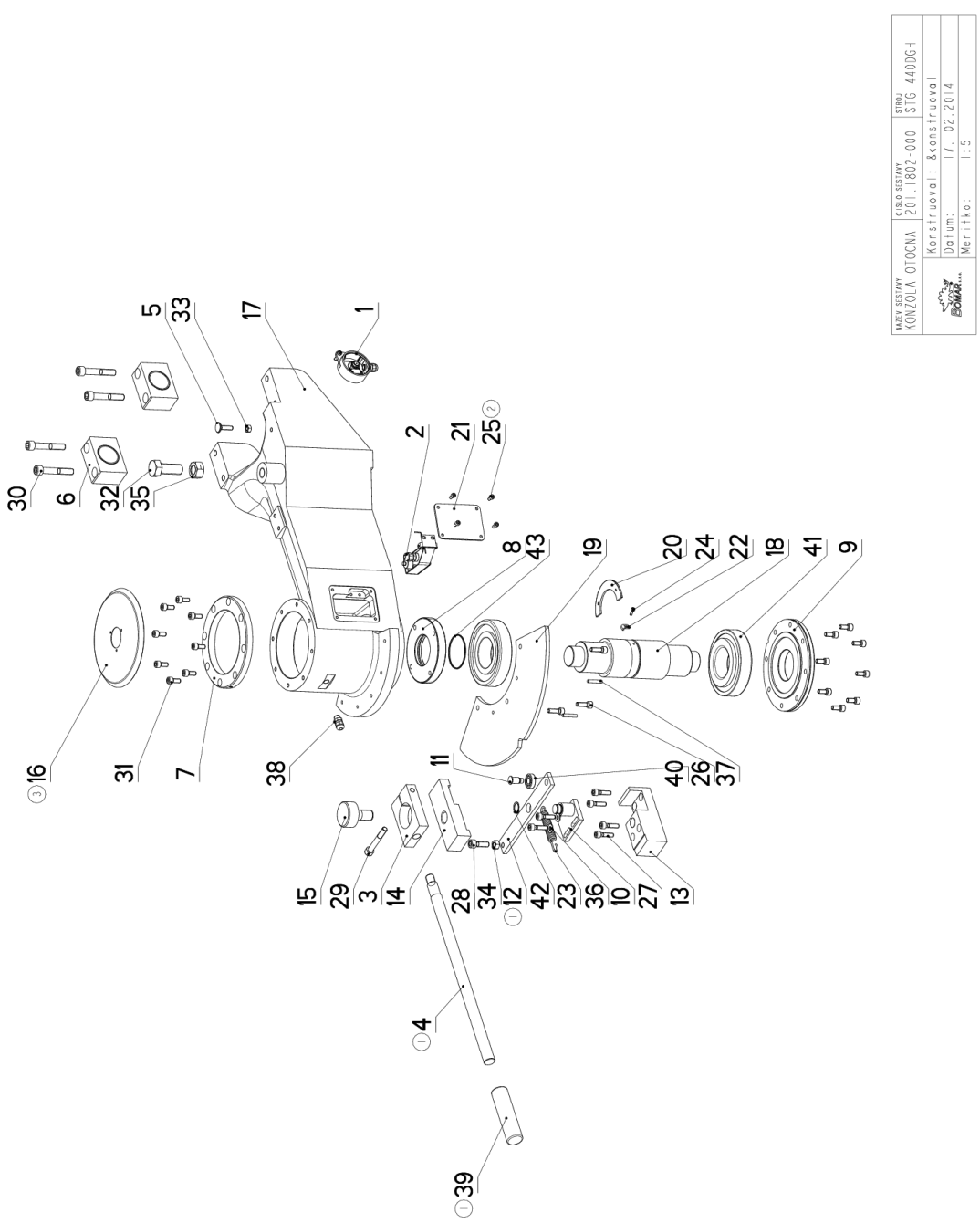

7.11. Kusovník / Piece list / Stückliste - Konzola otočná / Turnable consol / Drehkonsole

35	90.100.55.009	0	MATICE / NUT / MUTTER	MATICE _ M20	1
36	90.150.50.005	0	PODLOZKA / WASHER / UNTERLEGSCHEIBE	PODLOZKA 8,4	2
37	90.300.02.006	0	KOLIK VALC. KAL. / CYLINDRICAL PIN TEMPERED / ZYLINDERSTIFT GEHARTET	KOLIK 6X32	2
38	91.070.010	0	PRUCHODKA / LEADTHROUGH / DURCHFÜHRUNG	M12x1.5 CERNA	1
39	94.004.302	0	RUKOJET / HANDLE / GRIFF	D22	1
40	95.001.005	0	LOZISKO / BEARING / LAGER	6001 2RS	1
41	95.300.001	0	LOZISKO KUZELIK / BEARING / LAGER	30312A	2
42	95.800.008	0	SEGR HRIDEL. / OUTSIDE SAFETY RING / SICHERUNGSRING AUSSEN	POJISTNY KROUZEK 18	1
43	96.001.017	0	O-KROUZEK STATIC / STATIC O RING / O-RING STATISCH	60X3	1

1.ZRUSENA SOUCAST 30.0802-009 A NAHRAZENA 30.0802-013,ZRUS.SOUC.30.0702-005 A NAHR.30.0702-007, ZRUS.SOUC.94.002.001 A NAHR.94.004.502. 167/ZM141 2.6.2010 SLEZACKOVA

2.ZRUSEN ZAPUSTNY SROUB M5x6 A NAHR SROUBEM IMBUS M5x10(90.001.25.007).256/ZM252 17.10.2013 SLEZACKOVA

3.PRIDAN KRYT 30.1802-105. 034/ZM030 17.2.2014 SLEZACKOVA

Cislo Sestavy/Number of assembly/Nummer der Baugruppe; Verze (Ver.)/Version/Version; Nazev sestavy/Assembly title/Name der Baugruppe; Pozice (Poz.)/Position/Position; Objednaci cislo/Purchase order number/Bestellnummer; Nazev polozky/Volume title/Name der Position; Rozmer/Stock size/Abmessung

7.12. Odměřování / Measuring / Gehrungsmessung

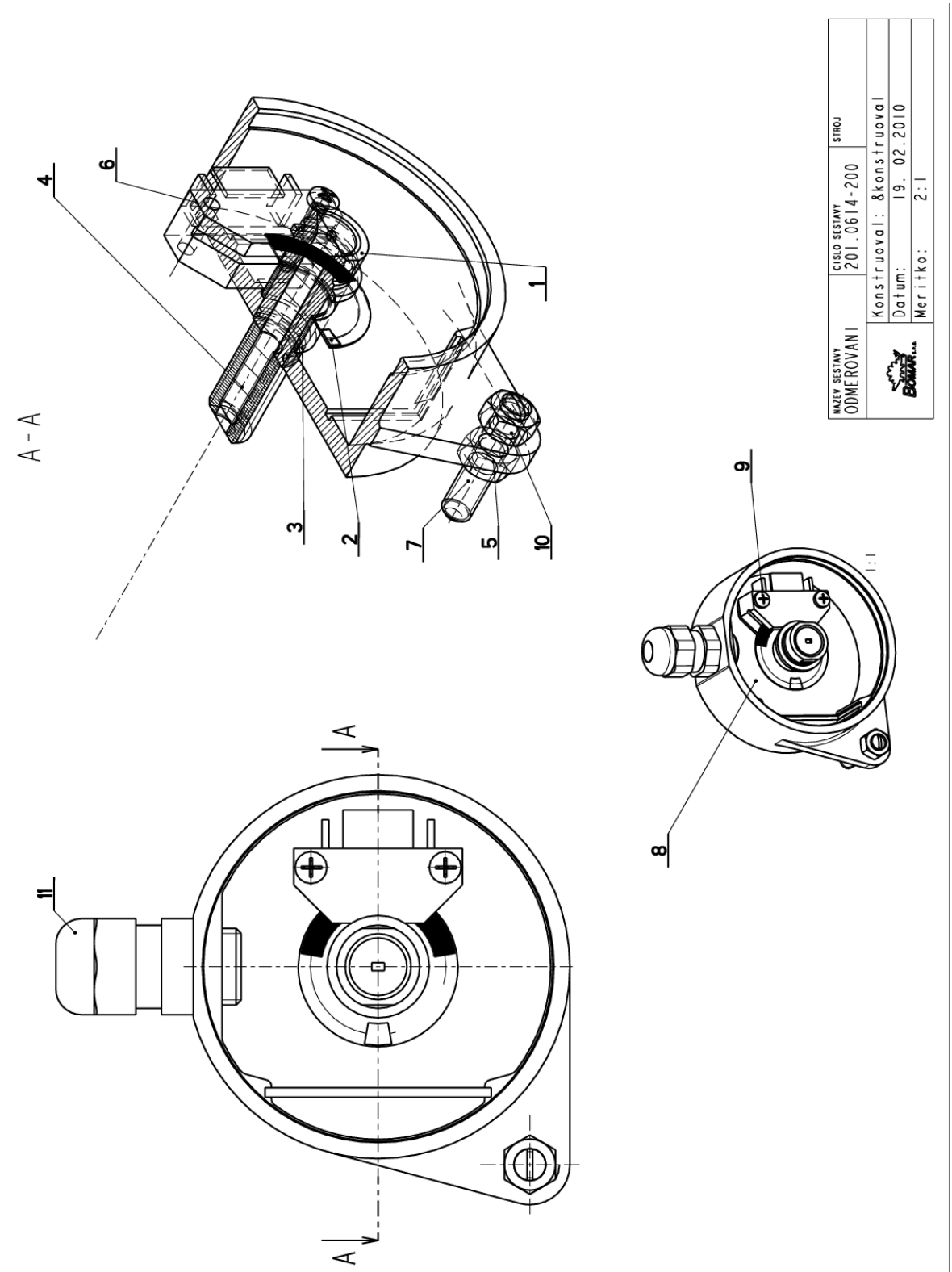

7.13. Kusovník / Piece list / Stückliste - Odměřování / Measuring / Gehrungsmessung

Cislo Sestavy	Ver.	Nazev sestavy
201.0614-200	0	ODMEROVANI/MEASURING/GEHRUNGSMESSUNG

Poz.	Objednaci cislo	Ver.	Nazev polozky	Rozmer	Ks
1	30.0614-201	0	CEP / LUG / BOLZEN	d 16	1
2	30.0614-203	0	CLONA / CURTAIN / SCHÜRZE	FOLIE 0.3	1
3	30.0614-204	0	POUZDRO / SLEEVE / BÜCHSE	TR 13x1	1
4	30.0614-208	0	SROUB / BOLT / SCHRAUBE	TYC M10	1
5	31.0614-202	0	KRABICE / BOX / DOSE	VYLISEK-PLAST	1
6	31.0631-201	0	SNIMAC / SENSOR / SENSOR		1
7	90.002.20.027	0	SROUB STAVECI / ADJUSTMENT BOLT / STELLSCHRAUBE	SROUB M5X25	1
8	90.011.27.019	0	SROUB ZAPUSTNY / COUNTERSINK BOLT / SENKSCHRAUBE	SROUB M5X40	1
9	90.014.50.004	0	SROUB / BOLT / SCHRAUBE	M2,5x14	2
10	90.100.55.003	0	MATICE / NUT / MUTTER	MATICE _ M5	2
11	91.070.010	0	PRUCHODKA / LEADTHROUGH / DURCHFÜHRUNG	M12x1,5 CERNA	1

Cislo Sestavy/Number of assembly/Nummer der Baugruppe; Verze (Ver.)/Version/Version; Nazev sestavy/Assembly title/Name der Baugruppe; Pozice (Poz.)/Position/Position; Objednaci cislo/Purchase order number/Bestellnummer; Nazev polozky/Volume title/Name der Position; Rozmer/Stock size/Abmessung

7.14. Snímač / Sensor / Sensor

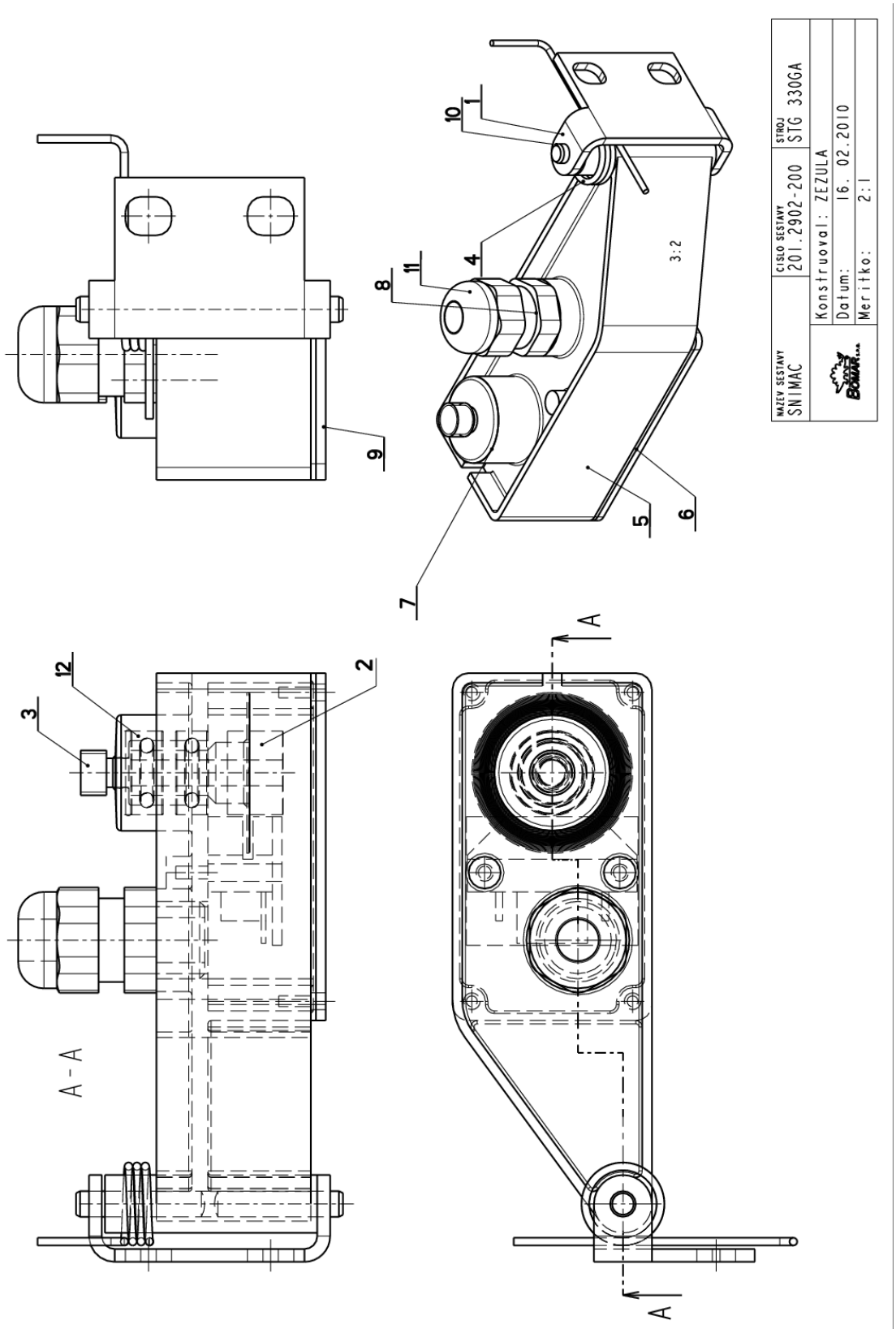

7.15. Kusovník / Piece list / Stückliste - Snímač / Sensor / Sensor

Cislo Sestavy	Ver.	Nazev sestavy
201.2902-200	0	SNIMAC/SENSOR/SENSOR

Poz.	Objednaci cislo	Ver.	Nazev polozky	Rozmer	Ks
1	30.2902-205	1	KONZOLA / CONSOLE / KONSOLE	P2 - 25.5	1
2	30.2902-209	0	CLONA / CURTAIN / SCHÜRZE		1
3	30.2902-212	0	PASTOREK / PINION / RITZEL	d 7	1
4	31.2902-113	0	PRUZINA / SPRING / FEDER	d 1.2	1
5	31.2902-201	0	RAMENO / SHOULDER / SÄGERAHMEN	VYLISEK-PLAST	1
6	31.2902-204	0	TESNENI / SEALING / DICHTUNG	TL.1 - 32.3	1
7	31.2902-207	0	VIKO / COVER / DECKEL	VYLISEK- PLAST	1
8	31.2930-001	0	SNIMAC / SENSOR / SENSOR		1
9	81.2902-203	0	KRYT / COVER / ABDECKUNG	P 1.5 - 31.8	1
10	90.300.0Z.XXX	0	KOLIK VALCOVY KALENY / CYLINDRICAL PIN TEMPERED / ZYLINDERSTIFT GEHÄRTET	KOLIK 4X20	2
11	91.070.010	0	PRUCHODKA / LEADTHROUGH / DURCHFÜHRUNG	M12x1.5 CERNA	1
12	95.001.002	0	LOZISKO / BEARING / LAGER	624 2RS	2

Cislo Sestavy/Number of assembly/Nummer der Baugruppe; Verze (Ver.)/Version/Version; Nazev sestavy/Assembly title/Name der Baugruppe; Pozice (Poz.)/Position/Position; Objednaci cislo/Purchase order number/Bestellnummer; Nazev polozky/Volume title/Name der Position; Rozmer/Stock size/Abmessung

7.16. Svěrák /Vice / Schraubstock

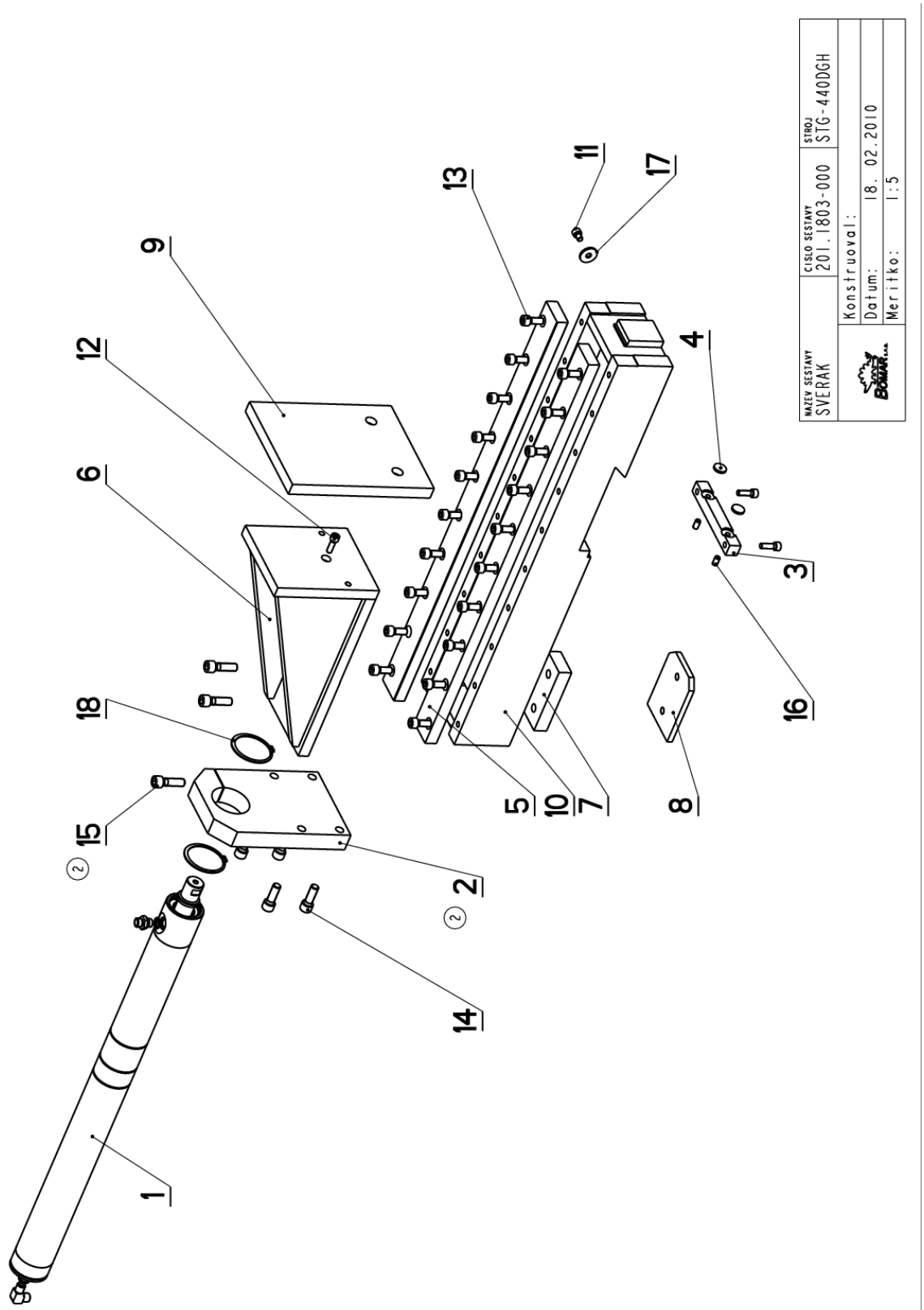

7.17. Kusovník / Piece list / Stückliste - Svěrák /Vice / Schraubstock

Cislo Sestavy	Ver.	Nazev sestavy
201.1803-000	2	SVERAK/VICE/SCHRAUBSTOCK

Poz.	Objednaci cislo	Ver.	Nazev polozky	Rozmer	Ks
1	201.1807-100	0	VALEC / ROLLER / ZYLINDER		1
2	30.0603-006 (2)	0	CELO / HEAD / STIRN	HR 150x 30	1
3	30.0803-004	0	LISTA SVERAKU / VICE TRIM / SCHRAUBSTOCKLEISTE	HR 20x 20	1
4	30.0803-005	0	DESKA / BOARD / PLATTE		2
5	30.1803-002	3	LISTA / TRIM / LEISTE	HR 50 x 20	2
6	30.1803-003	3	CELIST POHYBLIVA / MOVING JAW / BEWEGLICHE BACKE		1
7	30.1803-004	3	KOSTKA VODICI / LEAD CUBE / FÜHRUNGSKLOTZ	HR 50x 25	1
8	30.1803-005	1	DESKA / BOARD / PLATTE	HR 120 x 10	1
9	30.1803-006	0	CELIST POHYBLIVA / MOVING JAW / BEWEGLICHE BACKE	HR 200 x 20	1
10	30.1803-007	4	SVERAK / VICE / SCHRAUBSTOCK		1
11	90.001.25.029	0	SROUB IMBUS / ALLEN HEAD BOLT / IMBUSSCHRAUBE	M8X12	1
12	90.001.25.033	0	SROUB IMBUS / ALLEN HEAD BOLT / IMBUSSCHRAUBE	8x25	3
13	90.001.25.047	0	SROUB IMBUS / ALLEN HEAD BOLT / IMBUSSCHRAUBE	M10X25	20
14	90.001.25.059	0	SROUB IMBUS / ALLEN HEAD BOLT / IMBUSSCHRAUBE	M12X35	4
15	90.001.25.060 (2)	0	SROUB IMBUS / ALLEN HEAD BOLT / IMBUSSCHRAUBE	M12X40	3
16	90.002.2D.012	0	SROUB STAVECI / ADJUSTMENT BOLT / STELLSCHRAUBE	SROUB M8X16	2
17	90.151.50.005	0	PODLOZKA / WASHER / UNTERLEGSCHEIBE	PODLOZKA 8	1
18	95.800.021	0	KROUZEK POJIST.VNEJS / OUTSIDE SAFETY RING / SICHERUNGSRING AUßEN	POJISTNY KROUZEK 62	2

1.ZRUSENA DRZAK HADIC 94.204.005 NAHRAZENA V SESTAVE 201.1800-100 SOUCASTI 30.9307-109. 18.1.2006 SLEZACKOVA

2.VYMENA CEL - ZRUS.SOUC.30.0603-004 A NAHR. 30.0603-006,ZRUS.2xSROUB STAVECI M8x16 90.002.2D.012, 2xSROUB STAVECI M8x10 90.002.2D.011, PRIDAN SROUB IMBUS M12x40 90.001.25.060. 323/ZM366 2.10.2007 SLEZACKOVA

Cislo Sestavy/Number of assembly/Nummer der Baugruppe; Verze (Ver.)/Version/Version; Nazev sestavy/Assembly title/Name der Baugruppe; Pozice (Poz.)/Position/Position; Objednaci cislo/Purchase order number/Bestellnummer; Nazev polozky/Volume title/Name der Position; Rozmer/Stock size/Abmessung

7.18. Válec / Roller / Zylinder

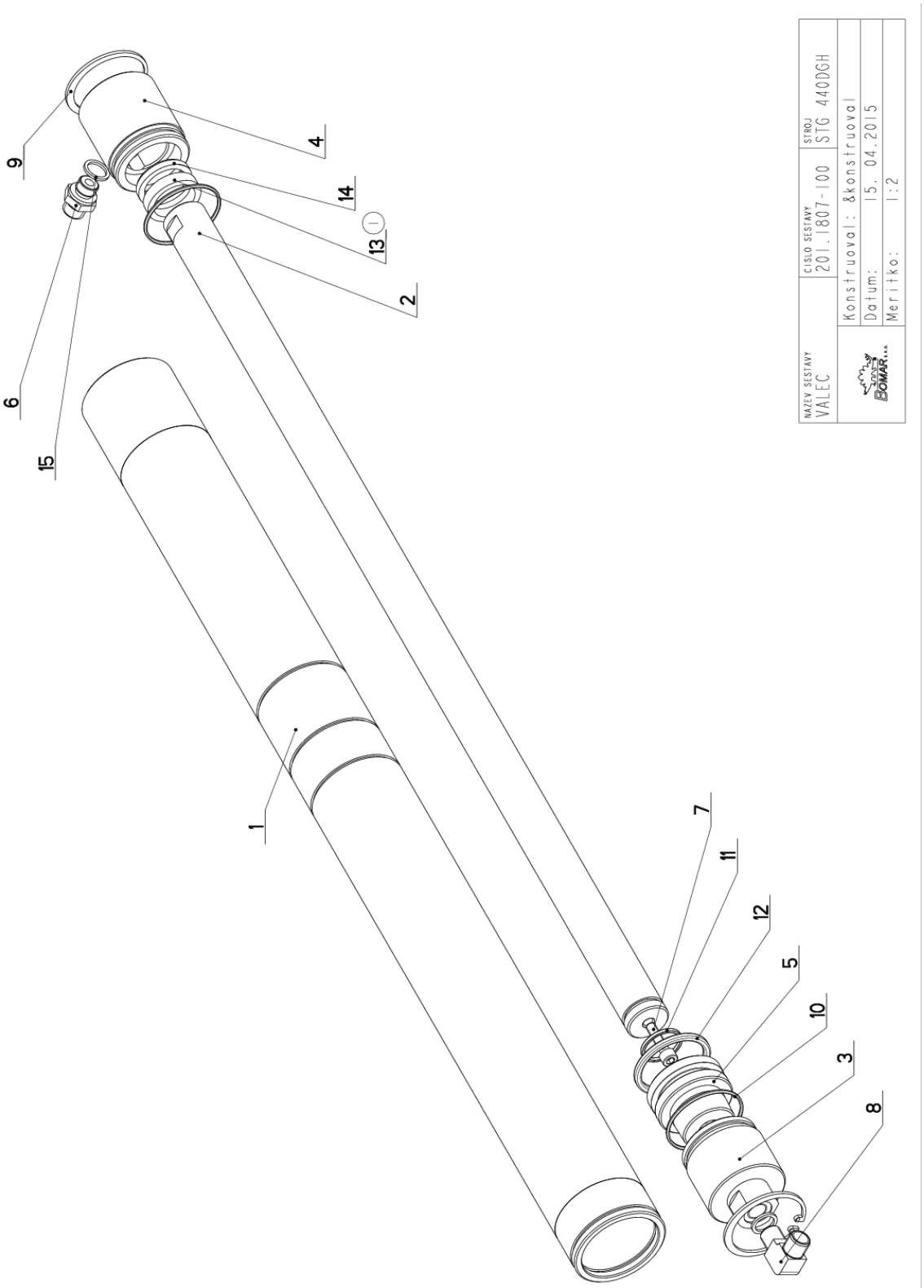

7.19. Kusovník / Piece list / Stückliste - Válec / Roller / Zylinder

Cislo Sestavy	Ver.	Nazev sestavy
201.1807-100	0	VALEC/ROLLER/ZYLINDER

Poz.	Objednaci cislo	Ver.	Nazev polozky	Rozmer	Ks
1	30.1807-101	2	VALEC / ROLLER / ZYLINDER	TR62/50H8	1
2	30.1807-102	1	PISTNICE / PISTON ROD / KOLBENSTANGE	d 28f7	1
3	30.1807-103	0	VIKO / COVER / DECKEL	d 55	1
4	30.1807-104	2	VIKO / COVER / DECKEL	TYC 55	1
5	30.1807-105	2	PIST / PISTON / KOLBEN	d 55	1
6	30.2807-109	0	SROUBENI PRIME / DIRECT BOLTING / GERADE VERSCHRAUBUNG		1
7	90.001.25.019	0	SROUB IMBUS / ALLEN HEAD BOLT / IMBUSSCHRAUBE	M6X25	1
8	92.004.001	0	SROUBENI UHLOVE / ANGLE BOLTING / WINKELVERSCHRAUBUNG	37701	1
9	95.801.009	0	SEGR DIRA / INSIDE SAFETY RING / SICHERUNGSRING INNEN	POJISTNY KROUZEK 52	2
10	96.001.013	0	O-KROUZEK STATIC / STATIC O RING / O-RING STATISCH	45X2	2
11	96.002.011	0	KROUZEK O DYNAMICKY / DYNAMIC O RING / O-RING DYNAMISCH	24X2	1
12	96.020.005	0	KROUZEK TESNICI / SEAL RING / DICHTUNGSRING	39.2X5.33	1
13	96.041.003 (1)	0	TESNENI / SEALING / DICHTUNG	601-28x36x7.1	1
14	96.060.003	0	KROUZEK STIRACI / SCRAPER RING / ABSTREIFRING	KROUZEK STIRACI 28	1
15	96.082.002	0	TESNENI / SEAL RING / DICHTUNGSRING	13/17x1.5 CU	2

(1) O-KROUZEK 96.002.014 NAHRAZEN MANZETOU 96.041.003 24.4.2003 ROZKOSNY

Cislo Sestavy/Number of assembly/Nummer der Baugruppe; Verze (Ver.)/Version/Version; Nazev sestavy/Assembly title/Name der Baugruppe; Pozice (Poz.)/Position/Position; Objednaci cislo/Purchase order number/Bestellnummer; Nazev polozky/Volume title/Name der Position; Rozmer/Stock size/Abmessung

7.20. Podstavec svěráku / Vice base / Schraubstockuntersatz

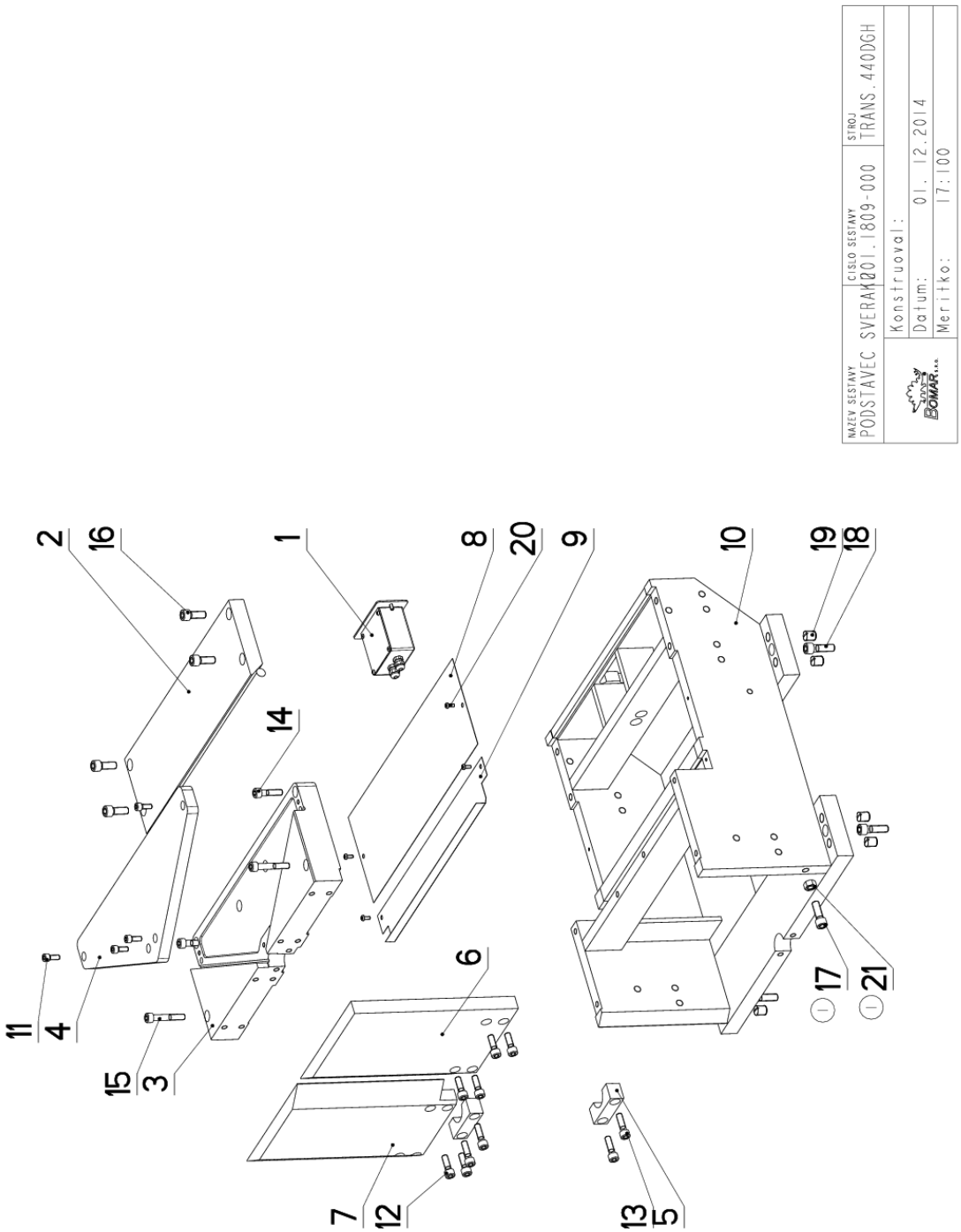

7.21. Kusovník / Piece list / Stückliste - Podstavec svěráku / Vice base / Schraubstockuntersatz

Cislo Sestavy	Ver.	Nazev sestavy
201.1809-000	1	PODSTAVEC SVERAKU/VICE BASE/SCHRAUBSTOCKUNTERSATZ

Poz.	Objednaci cislo	Ver.	Nazev polozky	Rozmer	Ks
1	201.2903-100	0	DISPLEJ / DISPLAY / DISPLAY		1
2	30.0809-002	1	VEDENI / GUIDE / BACKENFÜHRUNG	HR 150 x 30	1
3	30.0809-003	4	DESKA / BOARD / PLATTE	ODLITEK	1
4	30.0809-004	1	DESKA / BOARD / PLATTE	ODLITEK	1
5	30.0809-010	1	PRILOZKA / STRAP / LASCHE	HR 30 x 25	2
6	30.1809-002	0	CELIST PEVNA / SOLID JAW / FESTE BACKE	HR 245 x 25	1
7	30.1809-003	0	CELIST PEVNA / SOLID JAW / FESTE BACKE	HR 250 x 25	1
8	30.1809-004	1	KRYT / COVER / ABDECKUNG	P 0.5 - 500	1
9	30.1809-005	1	KRYT / COVER / ABDECKUNG	P 05 - 500	1
10	30.1809-101	2	PODSTAVEC SVERAKU / VICE BASE / SCHRAUBSTOCKUNTERSATZ		1
11	90.001.25.032	0	SROUB IMBUS / ALLEN HEAD BOLT / IMBUSSCHRAUBE	8x20	4
12	90.001.25.048	0	SROUB IMBUS / ALLEN HEAD BOLT / IMBUSSCHRAUBE	M10X30	6
13	90.001.25.049	0	SROUB IMBUS / ALLEN HEAD BOLT / IMBUSSCHRAUBE	M10X35	4
14	90.001.25.050	0	SROUB IMBUS / ALLEN HEAD BOLT / IMBUSSCHRAUBE	M10X40	2
15	90.001.25.054	0	SROUB IMBUS / ALLEN HEAD BOLT / IMBUSSCHRAUBE	M10X60	2
16	90.001.25.058	0	SROUB IMBUS / ALLEN HEAD BOLT / IMBUSSCHRAUBE	M12X30	4
17	90.001.25.059 (1)	0	SROUB IMBUS / ALLEN HEAD BOLT / IMBUSSCHRAUBE	M12X35	1
18	90.001.25.060	0	SROUB IMBUS / ALLEN HEAD BOLT / IMBUSSCHRAUBE	M12X40	4
19	90.002.20.019	0	SROUB STAVECI / ADJUSTMENT BOLT / STELLSCHRAUBE	SROUB M16X20	8
20	90.013.27.004	0	SROUB PULKULATY / HALF ROUND BOLT / HALBRUNDSCHRAUBE	M5X12	4
21	90.100.55.007 (1)	0	MATICE / NUT / MUTTER	MATICE _ M12	1

1.PRIDAN 1xSROUB M12x35(90.001.25.059),1xMATICE 12(90.100.55.007). 125/ZM244 1.12.2014 SLEZACKOVA

Cislo Sestavy/Number of assembly/Nummer der Baugruppe; Verze (Ver.)/Version/Version; Nazev sestavy/Assembly title/Name der Baugruppe; Pozice (Poz.)/Position/Position; Objednaci cislo/Purchase order number/Bestellnummer; Nazev polozky/Volume title/Name der Position; Rozmer/Stock size/Abmessung

7.22. Displej / Display / Display

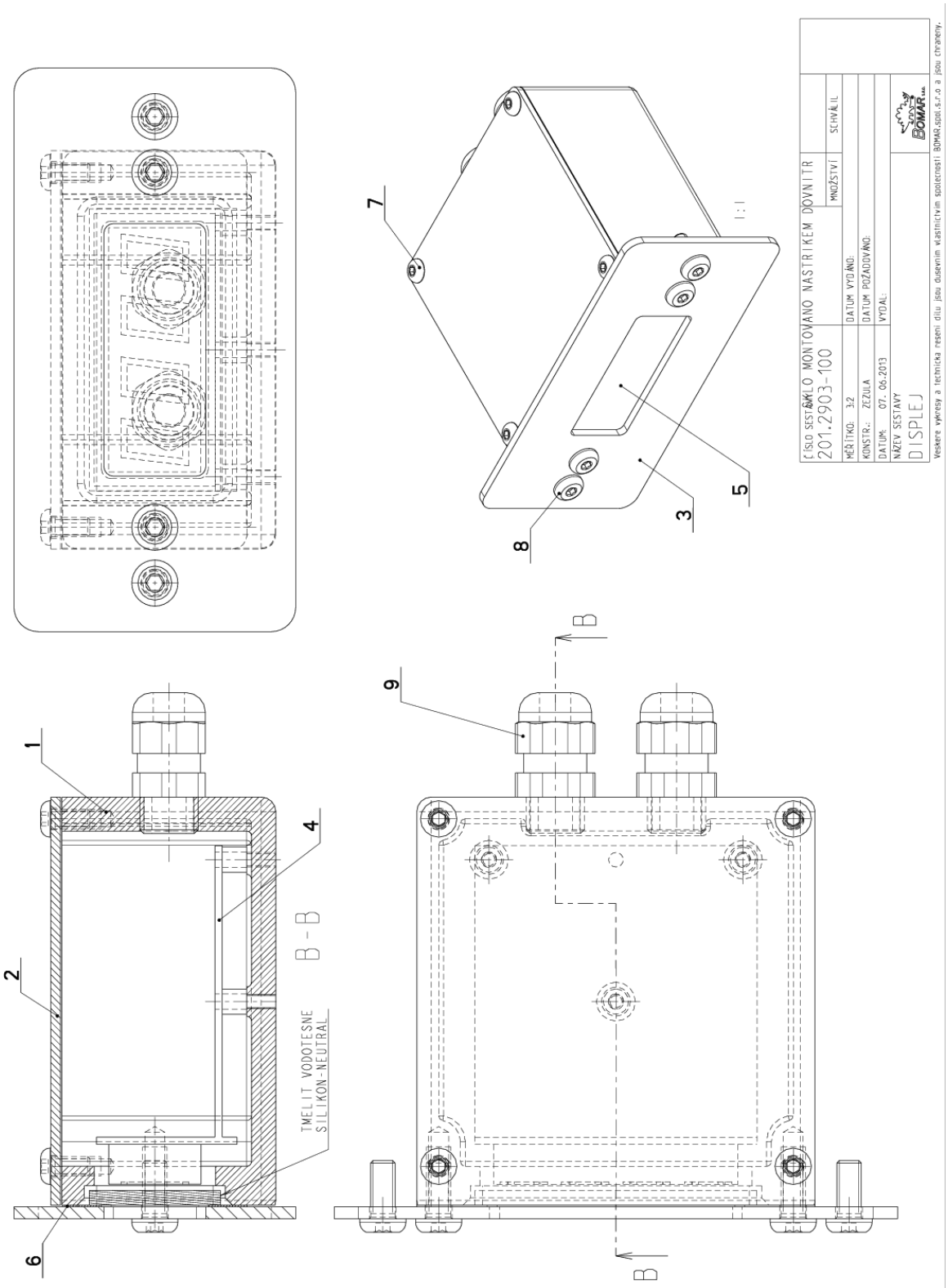

7.23. Kusovník / Piece list / Stückliste - Displej / Display / Display

Cislo Sestavy	Ver.	Nazev sestavy
201.2903-100	0	DISPLEJ/DISPLAY/DISPLAY

Poz.	Objednaci cislo	Ver.	Nazev polozky	Rozmer	Ks
1	30.2903-101	0	KRABICE / BOX / DOSE	ODLITEK	1
2	30.2903-103	0	VIKO / COVER / DECKEL	P 2 - 82	1
3	30.2903-104	0	CELO / HEAD / STIRN	P 2x58	1
4	31.0631-212	0	DISPLEJ / DISPLAY / DISPLAY	DAS DARSTELLUNG	1
5	31.2903-102	0	SKLO ORGANICKE / PLEXIGLASS / PLEXIGLAS	TL. 3 - 27	1
6	31.2903-106	0	TESNENI / SEALING / DICHTUNG	TL. 2.5 - 38	1
7	90.013.27.001		SROUB / BOLT / SCHRAUBE	M4x8	4
8	90.013.27.004	0	SROUB PULKULATY / HALF ROUND BOLT / HALBRUNDSCHRAUBE	M5X12	4
9	91.070.010	0	PRUCHODKA / LEADTHROUGH / DURCHFÜHRUNG	M12x1.5 CERNA	2

Cislo Sestavy/Number of assembly/Nummer der Baugruppe; Verze (Ver.)/Version/Version; Nazev sestavy/Assembly title/Name der Baugruppe; Pozice (Poz.)/Position/Position; Objednaci cislo/Purchase order number/Bestellnummer; Nazev polozky/Volume title/Name der Position; Rozmer/Stock size/Abmessung

7.24. Ovladací panel / Control panel / Bedienpult

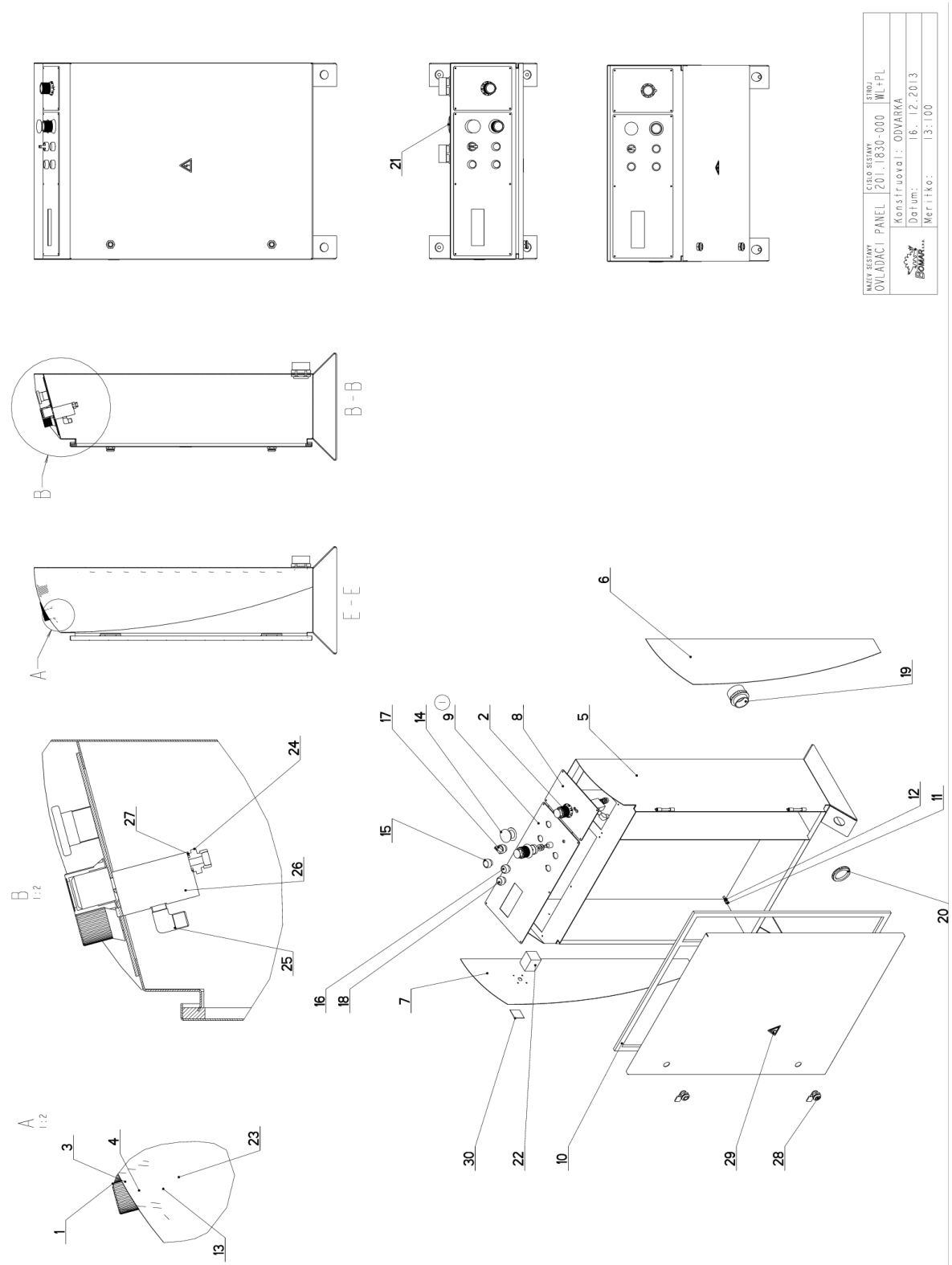

7.25. Kusovník / Piece list / Stückliste - Ovladací panel / Control panel / Bedienpult

Cislo Sestavy	Ver.	Nazev sestavy
201.1830-000	1	OVLADACI PANEL/CONTROL PANEL/BEDIENPULT

Poz.	Objednaci cislo	Ver.	Nazev polozky	Rozmer	Ks
1	30.6130-012	0	VIKO / COVER / DECKEL	P 0.5x 30x30	2
2	30.6130-018	0	HLAVICE / HEAD / KOPF	VYLISEK	1
3	31.6130-008	0	HLAVICE / HEAD / KOPF		1
4	30.R230-010	0	MEZIKUS / INTERMEDIATE PIECE / PASSSTÜCK	d 32	1
5	30.R230-201	3	SKRIN / BOX / KASTEN		1
6	30.R230-204	0	PLECH / PLATE / BLECH	P 1x220	1
7	30.R230-206	1	PLECH / PLATE / BLECH	P 1x220	1
8	30.R230-208	1	DESKA / BOARD / PLATTE	P 3x150	1
9	31.R230-207 (1)	0	PANEL ELEKTRO / ELECTRO PANEL / PANEL	P 3x205	1
10	61.352.001	0	TESNENI / SEALING / DICHTUNG	TESNENI 19x10	1
11	90.100.55.004	0	MATICE / NUT / MUTTER	MATICE _ M6	4
12	90.150.50.004	0	PODLOZKA / WASHER / UNTERLEGSCHEIBE	PODLOZKA 6,4	4
13	90.150.50.006	0	PODLOZKA / WASHER / UNTERLEGSCHEIBE	PODLOZKA 10,5	2
14	91.060.030	0	HLAVICE TOTAL STOP / TOTAL STOP HEAD / TASTE TOTAL STOP		1
15	91.060.031	0	HLAVICE / HEAD / KOPF		1
16	91.060.035	0	HLAVICE / HEAD / KOPF		1
17	91.060.051	0	PREPINAC / SWITCH / UMSCHALTER		1
18	91.060.053	0	HLAVICE / HEAD / KOPF		1
19	91.071.022	0	VYVODKA / BUSHING / TÜLLE		2
20	91.072.016	0	MATICE / NUT / MUTTER		2
21	91.074.013	0	UCPAVKA / PLUG / STOPFEN	M25x1,5	1
22	91.170.003	0	SPINAC VACKOVY / CAM SWITCH / SCHALTER	LE2-12-1763	1
23	91.283.015	0	POTENCIOMETR / POTENTIOMETER / POTENTIOMETER	TP 195 4K7/N 20A	1
24	92.002.103	0	SROUBENI PRIME / DIRECT BOLTING / GERADE VERSCHRAUBUNG	G 1/4" tr12	1
25	92.004.001	0	SROUBENI UHLOVE / ANGLE BOLTING / WINKELVERSCHRAUBUNG	37701	1
26	92.152.004	0	VENTIL SKRTICI / CHOKE VALVE / DROSSELVENTIL	VS01-04/R 2.5-0	1
27	96.082.002	0	TESNENI / SEAL RING / DICHTUNGSRING	13/17x1.5 CU	1
28	99.104.002	0	ZAMEK / LOCK / SCHLOSS	ZAMEK CINSKY	2
29	99.900.045	0	SAMOLEPKA / STICKER / AUFKLEBER		1
30	99.900.046	0	SAMOLEPKA / STICKER / AUFKLEBER		1

1.ZRUS.SOUCASTI 30.R230-207 A 31.R330-003 A NAHR.31.R230-207. 007/ZM021 4.2.2014 SLEZACKOVA

Cislo Sestavy/Number of assembly/Nummer der Baugruppe; Verze (Ver.)/Version/Version; Nazev sestavy/Assembly title/Name der Baugruppe; Pozice (Poz.)/Position/Position; Objednaci cislo/Purchase order number/Bestellnummer; Nazev polozky/Volume title/Name der Position; Rozmer/Stock size/Abmessung

7.26. Rameno / Shoulder / Sägerahmen

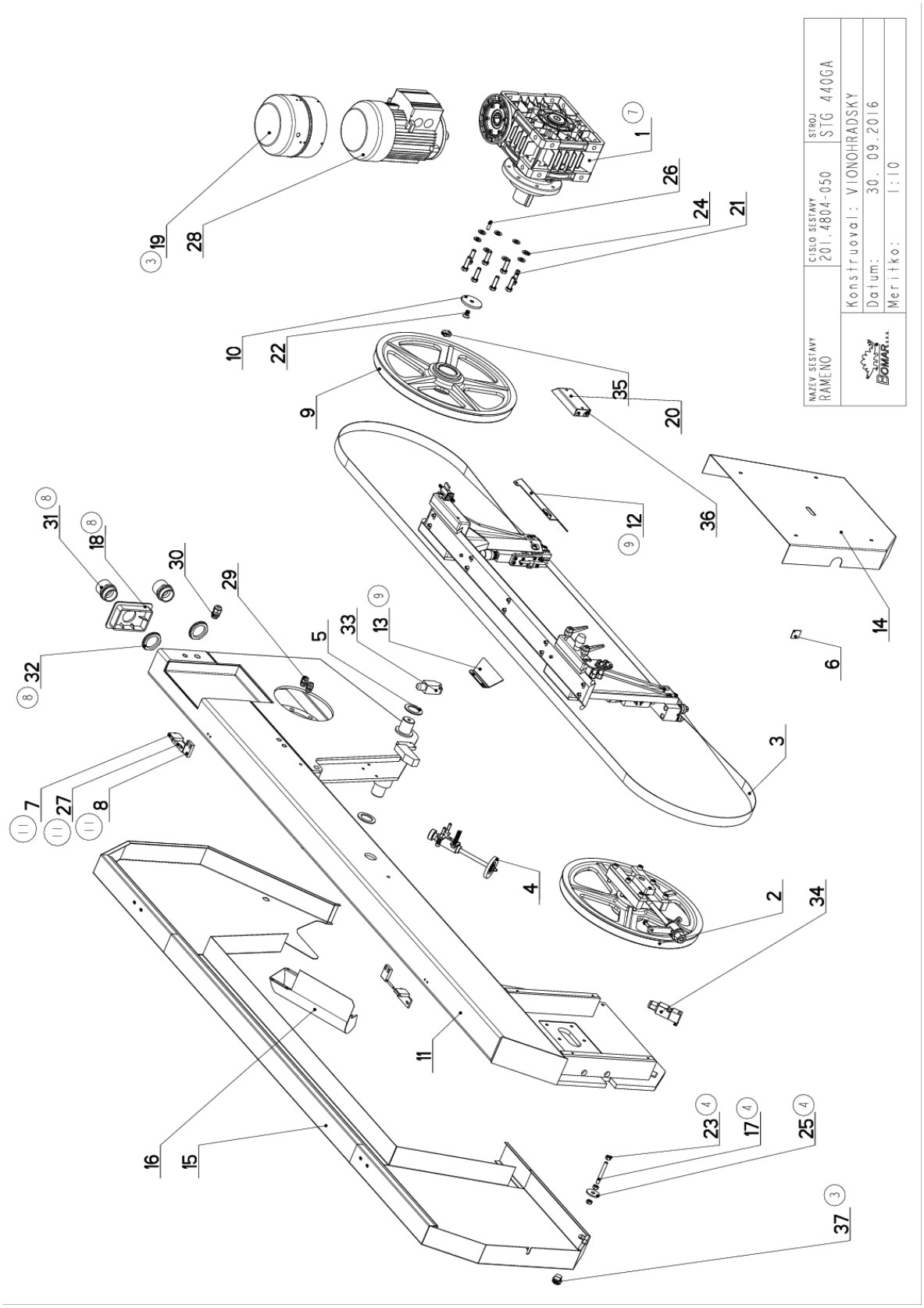

7.27. Kusovník / Piece list / Stückliste - Rameno / Shoulder / Sägerahmen

Cislo Sestavy	Ver.	Nazev sestavy
201.4804-050	11	RAMENO/SHOULDER/SÄGERAHMEN

Poz.	Objednaci cislo	Ver.	Nazev polozky	Rozmer	Ks
1	201.4805-150 (7)	0	PREVODOVKA / TRANSMISSION / GETRIEBE		1
2	201.4808-000	4	NAPINANI / TENSIONING / SPANNUNG		1
3	201.4810-000	4	VEDENI PASU / BELT GUIDE / SÄGEBANDFÜHRUNG		1
4	201.4814-400	0	KARTAC / BRUSH / BÜRSTE		1
5	30.0804-005	0	KROUZEK / RING / RING	P 3x60	2
6	30.0814-113	0	PLECH / PLATE / BLECH	P 2x30	1
7	30.1714-102 (11)	1	KONZOLA / CONSOLE / KONSOLE		2
8	30.1714-103 (11)	3	KOSTKA / CUBE / WÜRFEL	HR 30 x 10	2
9	30.1804-002	4	KOLO HNACI / DRIVE WHEEL / ANTRIEBSRAD	ODLITEK	1
10	30.1804-010	0	PODLOZKA / WASHER / UNTERLEGSCHEIBE	P 6x70	1
11	30.4804-051	3	RAMENO / SHOULDER / SÄGERAHMEN		1
12	30.4804-056 (9)	1	KRYT PASU / BELT COVER / BANDABDECKUNG	P 2x116	1
13	30.4804-057 (9)	0	KRYT PASU / BELT COVER / BANDABDECKUNG	P 2x105	1
14	30.4814-102	4	KRYT NAPINANI / TENSIONING COVER / BANDSPANNUNGSABDECKUNG	P 1.5x556	1
15	30.4814-303	3	KRYT PASU / BELT COVER / BANDABDECKUNG		1
16	30.4814-309	1	KRYT KARTACKU / BRUSH COVER / BÜRSTENABDECKUNG		1
17	30.8404-056 (4)	0	TYC ZAVITOVA / THREADED POLE / GEWINDESTANGE	M10	2
18	30.8404-057 (8)	0	ZATKA / PLUG / STOPFEN	150x100x5-8	1
19	30.8504-060 (3)	1	VENTILATOR / VENTILATOR / VENTILATOR		1
20	30.8914-211	1	KRYT / COVER / ABDECKUNG	P 1.5x104	1
21	90.005.55.034	0	SROUB 6HRANNY / 6 SIDED BOLT / SECHSKANTSCHRAUBE	SROUB M12X40	8
22	90.011.27.009	0	SROUB ZAPUSTNY / COUNTERSINK BOLT / SENKSCHRAUBE	SROUB M12X20	1
23	90.100.55.006 (4)	0	MATICE / NUT / MUTTER	MATICE _ M10	6
24	90.150.50.007	0	PODLOZKA / WASHER / UNTERLEGSCHEIBE	PODLOZKA 13	8
25	90.151.50.002 (4)	0	PODLOZKA / WASHER / UNTERLEGSCHEIBE	PODLOZKA 12	2
26	90.300.0Z.010	0	KOLIK VALC. KAL. / CYLINDRICAL PIN TEMPERED / ZYLINDERSTIFT GEHARTET	KOLIK 8X32	1
27	90.301.0Z.005 (11)	0	KOLIK VALCOVY / CYLINDRICAL PIN SOFT / ZYLINDERSTIFT WEICH	KOLIK 6X36	2
28	91.001.053	0	ELEKTROMOTOR / ELECTRIC MOTOR / ELEKTROMOTOR	MDERA 100-32pro	1
29	91.070.011	0	VYVODKA / BUSHING / TÜLLE	M16x1.5	2
30	91.070.012 (8)	0	VYVODKA / BUSHING / TÜLLE	M20x1.5	1
31	91.071.005 (8)	0	PRUCHODKA / LEADTHROUGH / DURCHFÜHRUNG		2
32	91.072.008	0	MATICE / NUT / MUTTER		2
33	91.173.007	0	SPINAC KONCOVY / END SWITCH / ENDSCHALTER		1
34	91.173.012	0	SPINAC KONCOVY / END SWITCH / ENDSCHALTER		1

Cislo Sestavy/Number of assembly/Nummer der Baugruppe; Verze (Ver.)/Version/Version; Nazev sestavy/Assembly title/Name der Baugruppe; Pozice (Poz.)/Position/Position; Objednaci cislo/Purchase order number/Bestellnummer; Nazev polozky/Volume title/Name der Position; Rozmer/Stock size/Abmessung

7.28. Rameno / Shoulder / Sägerahmen

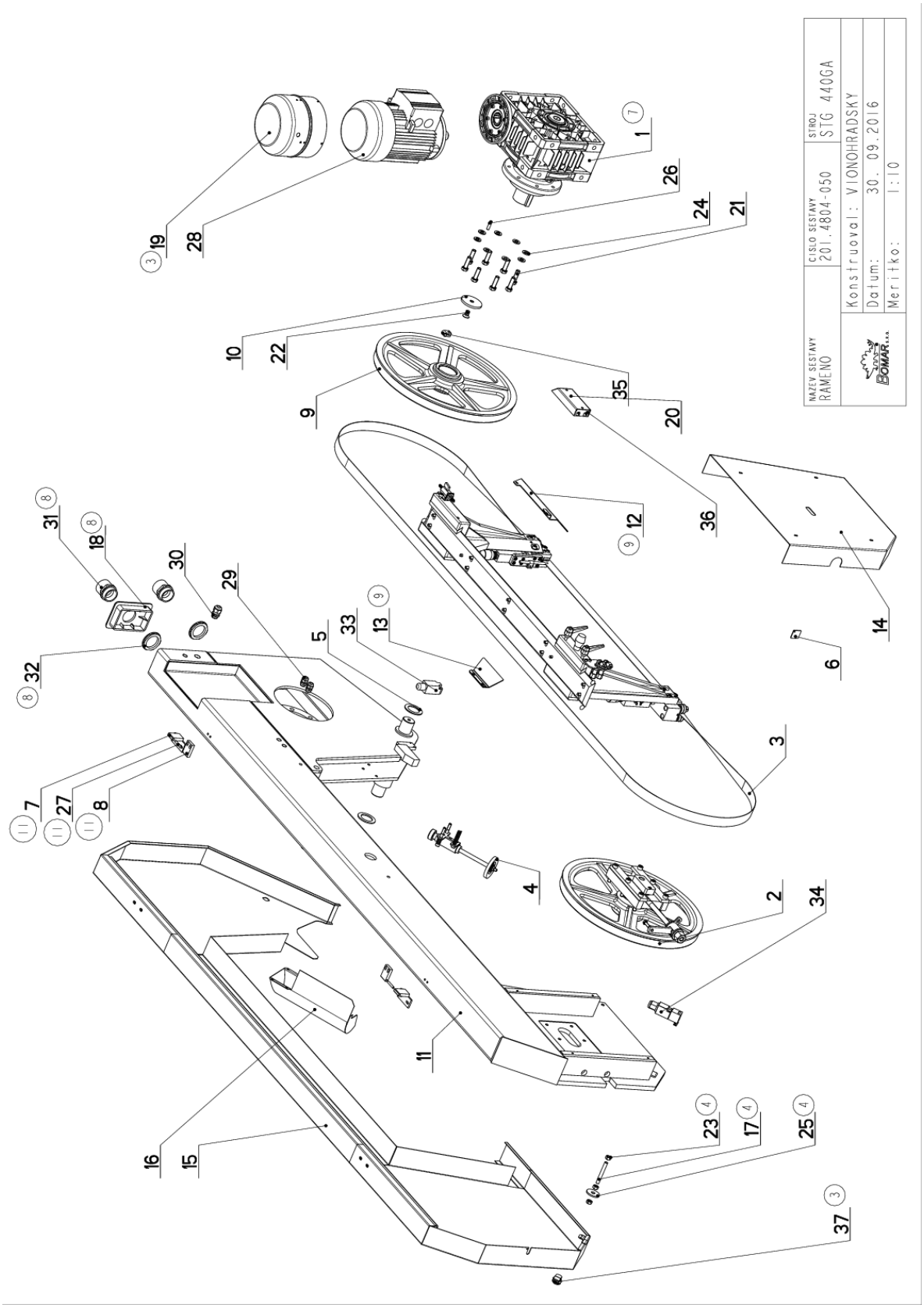

7.29. Kusovník / Piece list / Stückliste - Rameno / Shoulder / Sägerahmen

35	94.204.002	0	DRZAK / HOLDER / HALTER		1
36	94.204.005	0	DRZAK / HOLDER / HALTER	LBG 14/14-PP	1
37	99.104.002 (3)	0	ZAMEK / LOCK / SCHLOSS	ZAMEK CINSKY	2

1.ZRUS.KRYT 30.4804-052 A NAHR. ZATKOU 30.8404-055,PRIDANO VIKO PREVODOVKY 30.2904-059. 351/ZM365 9.10.2007 SLEZACKOVA
2.ZRUS.KRYT PASU 30.4014-108 A NAHR. 30.1814-104. 439/ZM442 27.11.2007 SLEZACKOVA
3.PRIDAN VENTILATOR 30.8504-060.,PRIDAN ZAMEK 99.104.002,DRZAKY 30.4807-092,30.4807-091.008/ZM008 23.1.2008 SLEZACKOVA
4.ZRUS.DRZAK 30.4807-092,30.4807-091,PRID.2xTYC ZAVITOVA 30.8404-056,2xPODLOZKA 12 (90.151.50.002),6xMATICE M10 (90.100.55.006). 077/ZM100 17.4.2009 SLEZACKOVA
5.ZRUSEN KRYT PASU 30.1814-104 A NAHRAZEN 30.1814-108. 207/ZM220 15.7.2010 SLEZACKOVA
6.ZRUSEN KRYT PASU 30.1814-108. ZM.224 23.7.2012 SLEZACKOVA
7.ZRUS.PREVODOVKA 201.4805-050 A NAHR.201.4805-150,ZRUS.KRYT 30.2904-059. 056/ZM105 28.3.2013 SLEZACKOVA
8.ZRUS.VYVODKA PG29(91.071.004) A NAHR.VYVODKOU PG36(91.071.005),ZRUS.MATICE PG29(91.072.007) A NAHRAZENA MATICI P36(91.072.008),ZRUS.VIKO 30.8404-055 A NAHR.30.8404-057. 095/ZM264
9.PRIDAN KRYT PASU 30.4804-056,30.4804-057. 090/ZM111 20.5.2014 SLEZACKOVA
10.ZRUSEN KLUZAK 30.0814-014. 011/ZM092 5.4.2016 SLEZACKOVA
11.ZRUS.PANT 201.1714-300,201.1714-400 A NAHR.2x30.1714-102,2x30.1714-103,2x90.301.0Z.005. 168/ZM308 30.9.2016 SLEZACKOVA

Cislo Sestavy/Number of assembly/Nummer der Baugruppe; Verze (Ver.)/Version/Version; Nazev sestavy/Assembly title/Name der Baugruppe; Pozice (Poz.)/Position/Position; Objednaci cislo/Purchase order number/Bestellnummer; Nazev polozky/Volume title/Name der Position; Rozmer/Stock size/Abmessung

7.30. Pant / Hinge / Türband

Cislo Sestavy
201.1714-300

Ver.
0

Nazev sestavy
PANT/HINGE /TÜRBAND

Poz.	Objednaci cislo	Ver.	Nazev polozky	Rozmer	Ks
1	30.1714-102	0	KONZOLA / CONSOLE / KONSOLE		1
2	30.1714-103	2	KOSTKA / CUBE / WÜRFEL	HR 30 x 10	1
3	90.301.02.006	0	KOLIK VALCOVY MEKKY / CYLINDRICAL PIN SOFT / ZYLINDERSTIFT WEICH	KOLIK 6X38	1

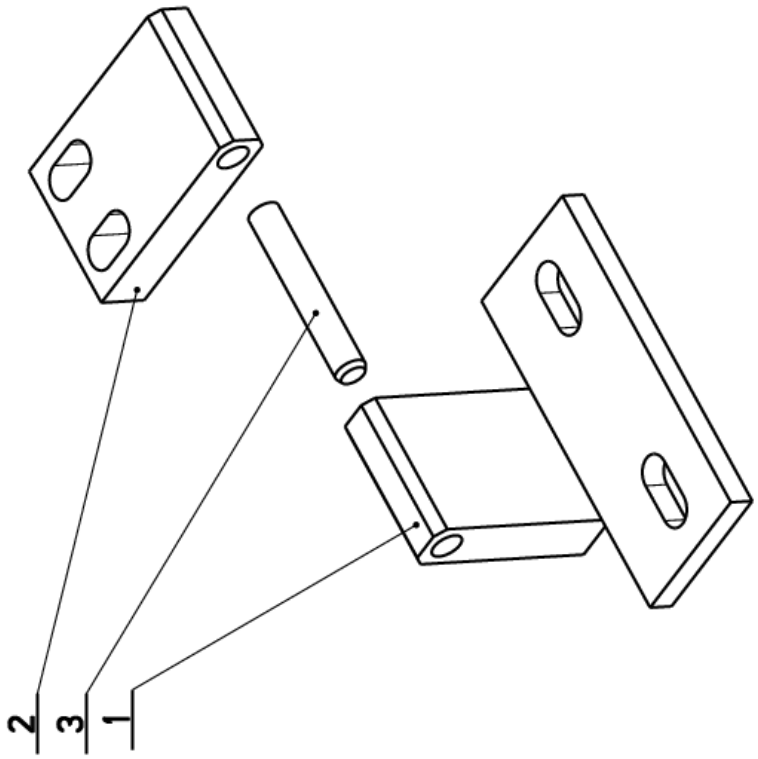

Cislo Sestavy/Number of assembly/Nummer der Baugruppe; Verze (Ver.)/Version/Version; Nazev sestavy/Assembly title/Name der Baugruppe; Pozice (Poz.)/Position/Position;
Objednaci cislo/Purchase order number/Bestellnummer; Nazev polozky/Volume title/Name der Position; Rozmer/Stock size/Abmessung

7.31. Pant / Hinge / Türband

Cislo Sestavy	Ver.	Nazev sestavy
201.1714-400	0	PANT/HINGE /TÜRBAND

Poz.	Objednaci cislo	Ver.	Nazev polozky	Rozmer	Ks
1	30.1714-102	0	KONZOLA / CONSOLE / KONSOLE		1
2	90.301.02.006	0	KOLIK VALCOVY MEKKY / CYLINDRICAL PIN SOFT / ZYLINDERSTIFT WEICH	KOLIK 6X38	1
3	30.1714-103	2	KOSTKA / CUBE / WÜRFEL	HR 30 x 10	1

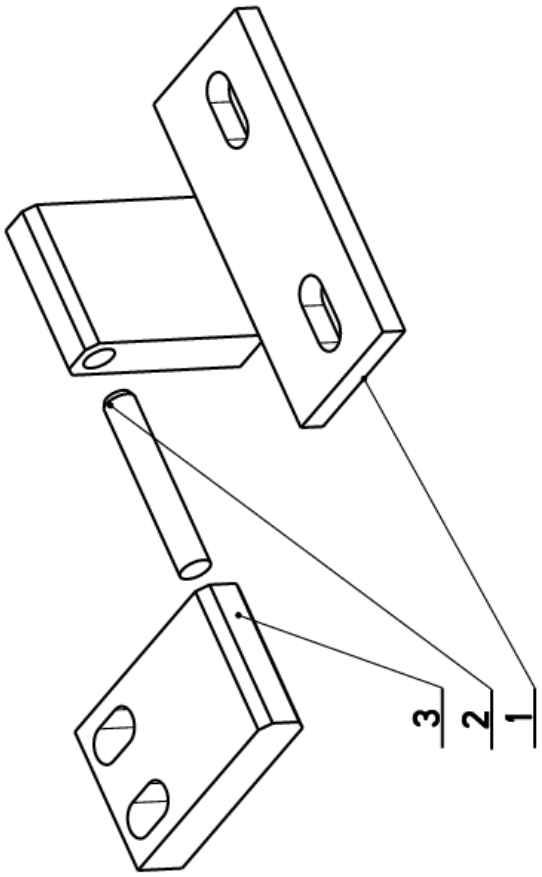

Cislo Sestavy/Number of assembly/Nummer der Baugruppe; Verze (Ver.)/Version/Version; Nazev sestavy/Assembly title/Name der Baugruppe; Pozice (Poz.)/Position/Position;
Objednaci cislo/Purchase order number/Bestellnummer; Nazev polozky/Volume title/Name der Position; Rozmer/Stock size/Abmessung

7.32. Převodovka / Transmission / Getriebe

Cislo Sestavy
201.4805-150

Ver.
0

Nazev sestavy
PREVODOVKA/TRANSMISSION /GETRIEBE

Poz.	Objednaci cislo	Ver.	Nazev polozky	Rozmer	Ks
1	30.0804-009	2	PODLOZKA / WASHER / UNTERLEGSCHEIBE	d 60	1
2	30.2904-008	0	PERO / SPRING / FEDER	HR 12x8	1
3	30.4804-004	2	HRIDEL / SHAFT / WELLE	d 65	1
4	30.4804-006	0	PERO / SPRING / FEDER	HR 14x14	1
5	30.M405-051	0	KROUZEK DISTANCNI / DISTANCE RING / DISTANZRING	TR 55x8	1
6	30.M405-052	0	PRIRUBA / FLANGE / FLANSCHE	ODLITEK	1
7	90.005.55.034	0	SROUB 6HRANNY / 6 SIDED BOLT / SECHSKANTSCHRAUBE	SROUB M12X40	8
8	90.011.27.009	0	ZAPUSTNY IMBUS / COUNTERSINK BOLT / SENKSCHRAUBE	SROUB M12X20	1
9	90.150.50.007	0	PODLOZKA / WASHER / UNTERLEGSCHEIBE	PODLOZKA 13	8
10	95.001.027	0	LOZISKO / BEARING / LAGER	6309 2RS	2
11	99.002.040	0	PREVODOVKA SNEKOVA / WORM GEAR TRANSMISSION / SCHNECKENGETRIEBE	MUIIQ P100 B14	1

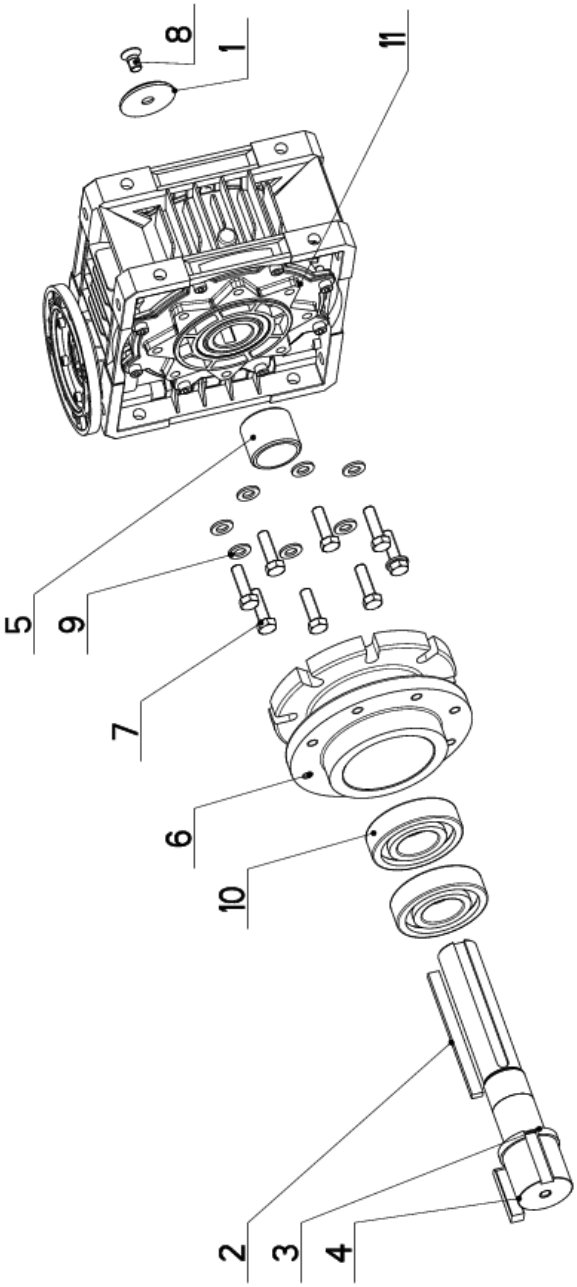

Cislo Sestavy/Number of assembly/Nummer der Baugruppe; Verze (Ver.)/Version/Version; Nazev sestavy/Assembly title/Name der Baugruppe; Pozice (Poz.)/Position/Position;
Objednaci cislo/Purchase order number/Bestellnummer; Nazev polozky/Volume title/Name der Position; Rozmer/Stock size/Abmessung

7.33. Napínání / Tensioning / Spannung

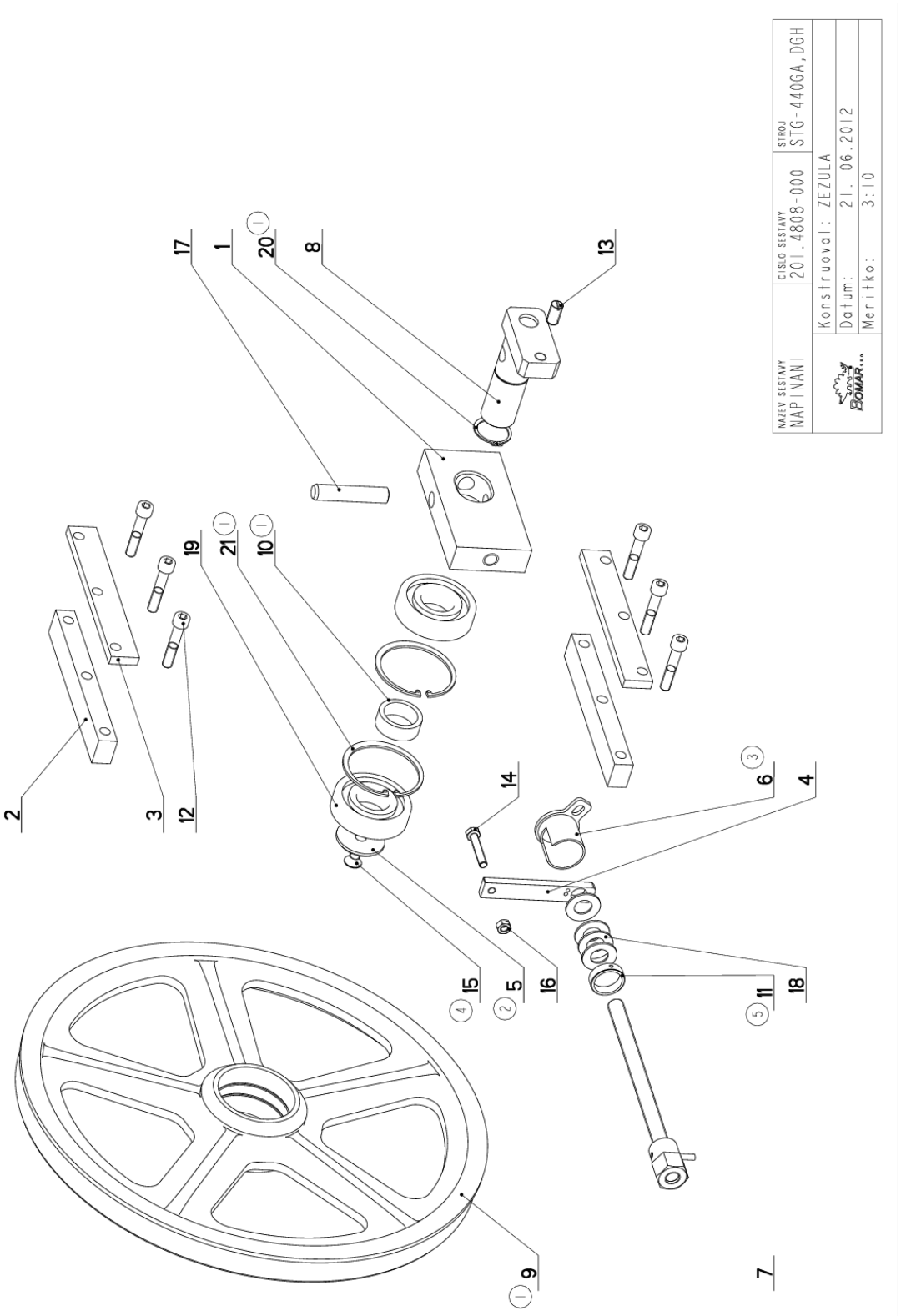

7.34. Kusovník / Piece list / Stückliste - Napínání / Tensioning / Spannung

Cislo Sestavy	Ver.	Nazev sestavy
201.4808-000	5	NAPINANI/TENSIONING/SPANNUNG

Poz.	Objednaci cislo	Ver.	Nazev polozky	Rozmer	Ks
1	30.0808-001	1	KOSTKA NAPINANI / TENSIONING CUBE / BANDSPANNUNGSWÜRFEL	80x30	1
2	30.0808-002	1	LISTA VODICI / LEAD TRIM / FÜHRUNGSLEISTE	30x20	2
3	30.0808-006	1	LISTA / TRIM / LEISTE	HR 30x10	2
4	30.1708-004	4	DRZAK / HOLDER / HALTER	HR 20x8	1
5	30.2908-001 (2)	1	PODLOZKA / WASHER / UNTERLEGSCHEIBE	d 50	1
6	30.2908-102 (3)	1	DRZAK / HOLDER / HALTER		1
7	30.4008-001	2	SROUB / BOLT / SCHRAUBE		1
8	30.4808-101 (1)	4	CEP NAPINANI / TENSIONING LUG / SPANNUNGSBOLZEN		1
9	30.4808-102 (1)	2	KOLO NAPINACI / TENSIONING WHEEL / UMLENKRAD	ODLITEK	1
10	30.4808-103 (1)	1	KROUZEK DISTANCNI / DISTANCE RING / DISTANZRING	TR 45x5	1
11	30.M208-001 (5)	0	KROUZEK / RING / RING	TR 35x6	1
12	90.001.25.053	0	SROUB IMBUS / ALLEN HEAD BOLT / IMBUSSCHRAUBE	M10X55	6
13	90.002.20.013	0	SROUB STAVECI / ADJUSTMENT BOLT / STELLSCHRAUBE	SROUB M12X25	1
14	90.005.55.020	0	SROUB 6HRANNY / 6 SIDED BOLT / SECHSKANTSCHRAUBE	SROUB M8X45	1
15	90.011.27.008 (4)	0	ZAPUSTNY IMBUS / COUNTERSINK BOLT / SENKSCHRAUBE	SROUB M10X20	1
16	90.100.55.005	0	MATICE / NUT / MUTTER	MATICE _ M8	1
17	90.300.02.003	0	KOLIK VALC. KAL. / CYLINDRICAL PIN TEMPERED / ZYLINDERSTIFT GEHARTET	KOLIK 16X80	1
18	90.350.02.002	0	PRUZINA TALIROVA / DISC SPRING / TELLERFEDER	35,5X18,3X2,0X2,8	4
19	95.001.026	0	LOZISKO / BEARING / LAGER	6307 2RS	2
20	95.800.014	0	SEGR HRIDEL. / OUTSIDE SAFETY RING / SICHERUNGSRING AUSSEN	POJISTNY KROUZEK 35	1
21	95.801.013 (1)	0	SEGR DIRA / INSIDE SAFETY RING / SICHERUNGSRING INNEN	POJISTNY KROUZEK 80	2

1.ZMENA 30.1808-004 NA 30.4808-103, 1808-001 NA 4808-102, 1808-003 NA 4808-101, PRIDANA 1x 95801.013 14.5.2004 URICAR

2. DOPLNENA PODLOZKA 30.2908-001, 3.12.04 STASTNY

3.ZRUSEN KALISEK 30.3508-002 A NAHRAZEN KALISKEM 30.2908-102. 076/ZM140 30.4.2008 SLEZACKOVA

4.ZRUS.SROUB M12x20(90.011.27.009) A NAHR.M10x20(90.011.27.008). 110/ZM212 21.6.2012 SLEZACKOVA

5.ZRUSEN KROUZEK 30.3508-004 A NAHR.30.M208-001. 017/ZM050 13.2.2017 SLEZACKOVA

7.35. Vedení pásu / Belt guide / Sägebandführung

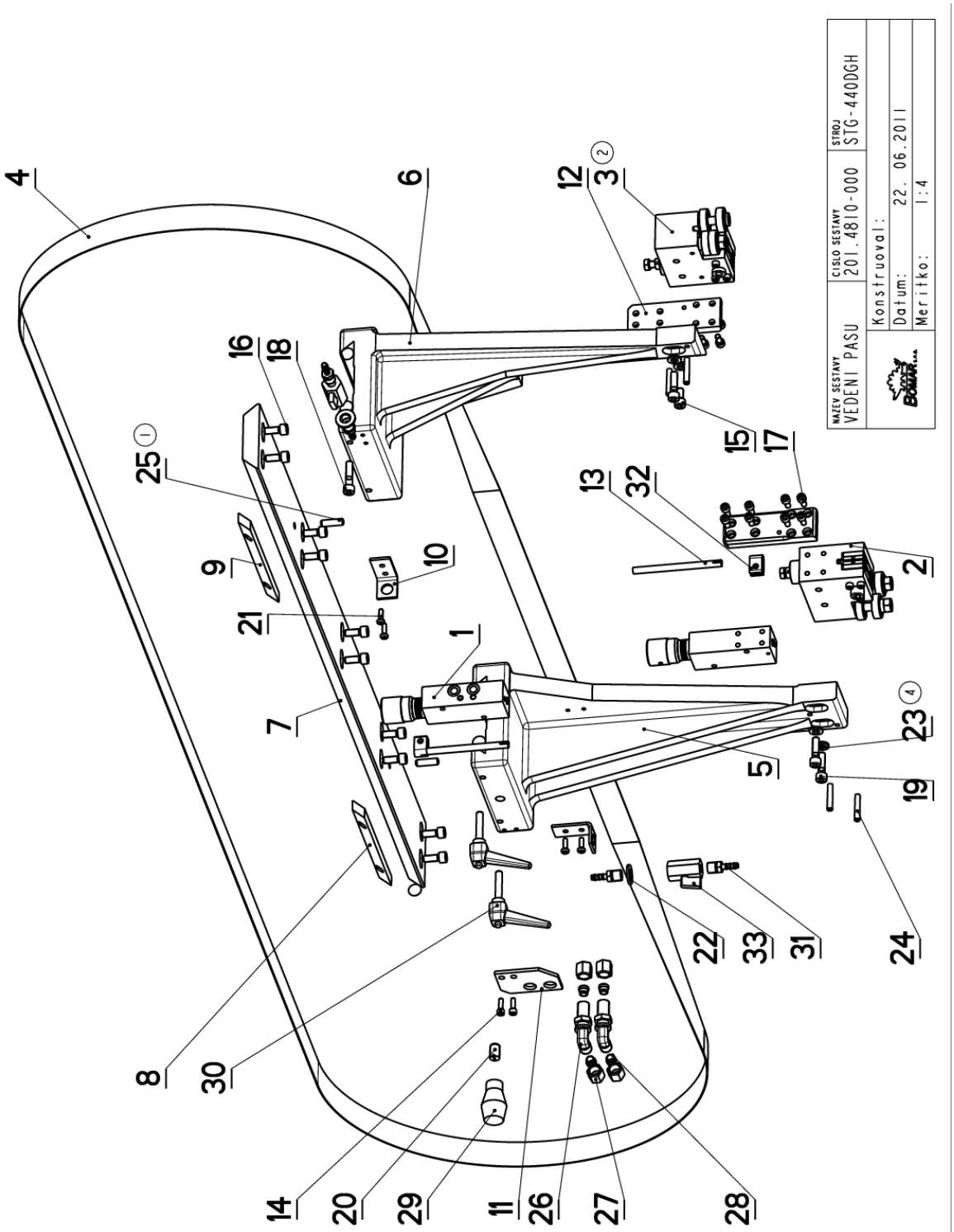

Cislo Sestavy	Ver.	Nazev sestavy
201.4810-000	4	VEDENI PASU/BELT GUIDE/SÄGEBANDFÜHRUNG

Poz.	Objednaci cislo	Ver.	Nazev polozky	Rozmer	Ks
1	251.077	0	REGULACE PRITLAKU / PRESSURE REGULATION / SCHNITTDRUCKREGULATION		2
2	201.4810-200	2	KOSTKA VODICI / LEAD CUBE / FÜHRUNGSKLOTZ		1
3	201.6910-110 (2)	2	KOSTKA VODICI / LEAD CUBE / FÜHRUNGSKLOTZ		1
4	30.1804-901	0	PAS PILOVY 440 / SAW BELT / SÄGEBAND	34x1.1	1
5	30.1810-001	1	DRZAK / HOLDER / HALTER		1
6	30.1810-002	1	DRZAK / HOLDER / HALTER		1
7	30.1810-003	1	LISTA / TRIM / LEISTE	HR 90x20	1
8	30.1810-004	2	LISTA / TRIM / LEISTE	HR 30x10	1
9	30.1810-005	2	LISTA / TRIM / LEISTE	HR 30x10	1
10	30.1814-011	0	DRZAK / HOLDER / HALTER	P 3- 76	2
11	30.1816-210	0	DRZAK / HOLDER / HALTER	P 4x50	1
12	30.2016-006	0	DESKA / BOARD / PLATTE	HR 40x12	2
13	30.3510-004	0	TRUBKA / TUBE / ROHR	TR 8x 1	2
14	90.001.25.009	0	SROUB IMBUS CERNENY / ALLEN HEAD BOLT / IMBUSSCHRAUBE	M5X16	2
15	90.001.25.031	0	SROUB IMBUS CERNENY / ALLEN HEAD BOLT / IMBUSSCHRAUBE	8x16	1
16	90.001.25.032	0	SROUB IMBUS CERNENY / ALLEN HEAD BOLT / IMBUSSCHRAUBE	8x20	10
17	90.001.25.092	0	SROUB IMBUS / ALLEN HEAD BOLT / IMBUSSCHRAUBE	M6X14	16
18	90.001.55.035	0	SROUB IMBUS CERNENY / ALLEN HEAD BOLT / IMBUSSCHRAUBE	M8X35	1
19	90.001.55.083	0	SROUB IMBUS / ALLEN HEAD BOLT / IMBUSSCHRAUBE	M8X30	3
20	90.002.2D.018	0	SROUB STAVECI / ADJUSTMENT BOLT / STELLSCHRAUBE	SROUB M12X20	1
21	90.013.27.005	0	SROUB PULKULATY / HALF ROUND BOLT / HALBRUNDSCHRAUBE	M5X16	4
22	90.150.50.007	0	PODLOZKA / WASHER / UNTERLEGSCHEIBE	PODLOZKA 13	2
23	90.163.00.001 (4)	0	PODLOZKA / WASHER / UNTERLEGSCHEIBE	M8	4
24	90.302.0Z.001	0	KUZEL. KOLIK S ZAV. / TAPER PIN + THREAD / KEGELBOLZEN + GEWINDE	KOLIK 6X36	4
25	90.303.0Z.021 (1)	0	KOLIK / PIN / BOLZEN	KOLIK 8X28	2
26	92.009.001	0	PRUCHODKA / LEADTHROUGH / DURCHFÜHRUNG	24146	2
27	92.013.001	0	SROUBENI PRIME / DIRECT BOLTING / GERADE VERSCHRAUBUNG		4
28	92.014.001	0	KROUZEK TESNICI / SEAL RING / DICHTUNGSRING	372405	4
29	94.002.001	0	RUKOJET / HANDLE / GRIFF		1
30	94.008.003	0	PAKA UPINACI / ATTACHMENT LEVER / SPANNHEBEL	M8x40	2
31	94.202.002	0	REDUKCE / REDUCTION / ADAPTOR / REDUKTION	REDUKCE 6/R1/4"	4
32	94.204.001	0	DRZAK / HOLDER / HALTER		2
33	99.260.003	0	VENTIL / VALVE / VENTIL	1/4"	2

1.DOPLNEN 2xKOLIK PRUZNY 8x28 90.303.0Z.021 . 344/ZM362 24.9.2007 SLEZACKOVA
2.ZRUS.KOSTKA 201.4810-100 A NAHR.KOSTKOU 201.6910-110. 142/ZM172 11.11.2009 SLEZACKOVA
4.PRIDANA 4x PODLOZKA NORD LOCK 8 (90.163.00.001). 145/ZM161 22.6.2011 SLEZACKOVA

7.37. Kostka vodící / Lead cube / Führungsklotz

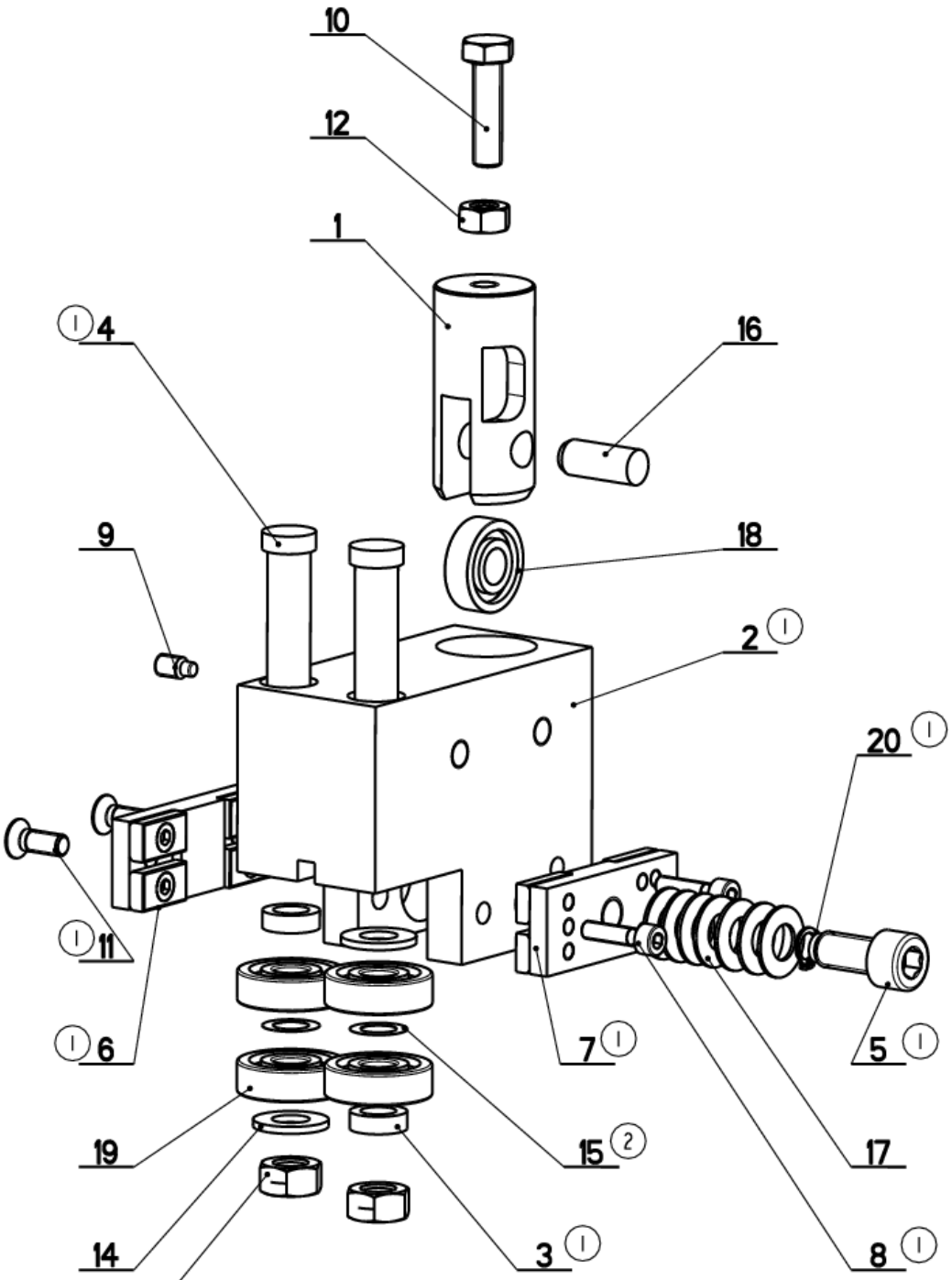

NAZEV SESTAVY	CISLO SESTAVY	STROJ
KOSTKA VODICI	201.4810-200	STG 440GA

Konstruoval:	VINOHRADSKY
Datum:	01. 11.2010
Meritko:	7:10

7.38. Kusovník / Piece list / Stückliste - Kostka vodící / Lead cube / Führungsklotz

Cislo Sestavy	Ver.	Nazev sestavy
201.4810-200	2	KOSTKA VODICI/LEAD CUBE/FÜHRUNGSKLOTZ

Poz.	Objednaci cislo	Ver.	Nazev polozky	Rozmer	Ks
1	30.1810-202	3	DRZAK / HOLDER / HALTER	TYC 28	1
2	30.1810-203 (1)	0	KOSTKA VODICI / LEAD CUBE / FÜHRUNGSKLOTZ	TYC 80x50	1
3	30.C210-403 (1)	1	DISTANC / DISTANCE / DISTANZ	TR 16x3	2
4	30.Y310-212 (1)	0	EXCENTR / CAM / EXZENTER	d 15	2
5	30.Y310-306 (1)	0	SROUB IMBUS / ALLEN HEAD BOLT / IMBUSSCHRAUBE	M10x25	1
6	30.Y310-310 (1)	0	DRZAK TVRDOKOVU / POA HOLDER / HM-HALTER		1
7	30.Y310-320 (1)	0	DRZAK TVRDOKOVU / POA HOLDER / HM-HALTER		1
8	90.001.25.010 (1)	0	SROUB IMBUS / ALLEN HEAD BOLT / IMBUSSCHRAUBE	M5X20	3
9	90.004.2D.002	0	SROUB STAVECI / ADJUSTMENT BOLT / STELLSCHRAUBE	SROUB M6X12	1
10	90.005.55.017	0	SROUB 6HRANNY / 6 SIDED BOLT / SECHSKANTSCHRAUBE	SROUB M8X30	1
11	90.011.27.017 (1)	0	SROUB ZAPUSTNY / COUNTERSINK BOLT / SENKSCHRAUBE	SROUB M6X16	2
12	90.100.55.005	0	MATICE / NUT / MUTTER	MATICE _ M8	1
13	90.100.55.006	0	MATICE / NUT / MUTTER	MATICE _ M10	2
14	90.150.50.006	0	PODLOZKA / WASHER / UNTERLEGSCHEIBE	PODLOZKA 10,5	2
15	90.154.50.001 (2)	0	PODLOZKA / WASHER / UNTERLEGSCHEIBE	10x16x0.1	2
16	90.301.0Z.009	0	KOLIK VALCOVY / CYLINDRICAL PIN SOFT / ZYLINDERSTIFT WEICH	KOLIK 10X26	1
17	90.350.0Z.005	0	PRUZINA TALIROVA / DISC SPRING / TELLERFEDER	20X10.2X1	7
18	95.001.004	0	LOZISKO / BEARING / LAGER	6000 2RS	1
19	95.001.014	0	LOZISKO / BEARING / LAGER	6200 2RS	4
20	95.800.002 (1)	0	KROUZEK POJIST.VNEJS / OUTSIDE SAFETY RING / SICHERUNGSRING AUßEN	POJISTNY KROUZEK 8	1

1.ZRUS.DRZAK TVRDOKOVU 30.0810-005 A NAHR. 30.Y310-310,30.Y310-320,ZRUS.EXCENTR 30.0810-009,30.0810-010 A NAHR.30.Y310-212,ZRUS.KOSTKA 30.1810-201 A NAHR.30.1810-203,ZRUS.SOUC.30.0810-007,30.0810-103,30.0810-104, 90.001.55.082,90.011.27.022,PRID.SOUCASTI 30.C210-403,30.Y310-306,90.011.27.017,90.001.25.010,95.800.002. ZM172 27.1.2010 SLEZACKOVA

2.PRIDANA 2xPODLOZKA 10x16x0.1 (90.154.50.001). 277/ZM294 1.11.2010 SLEZACKOVA

7.39. Kostka vodící / Lead cube / Führungsklotz

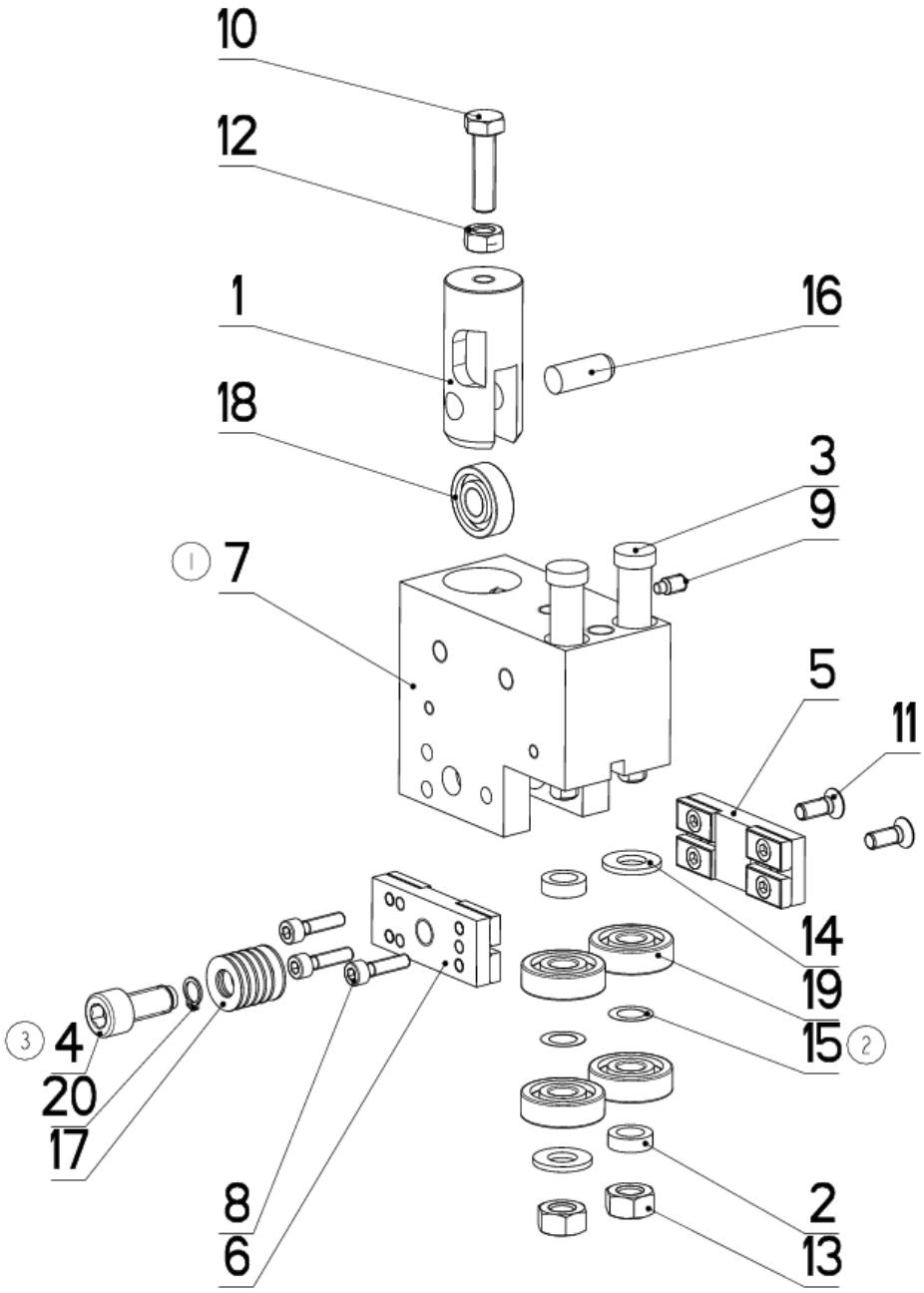

NAZEV SESTAVY	CISLO SESTAVY	STROJ
KOSTKA VODICI	201.6910-110	IND330GANC
BOMAR	Konstruoval: VINOHRADSKY	
	Datum: 08. 08.2014	
	Meritko: 1:2	

7.40. Kusovník / Piece list / Stückliste - Kostka vodící / Lead cube / Führungsklotz

Cislo Sestavy	Ver.	Nazev sestavy
201.6910-110	3	KOSTKA VODICI/LEAD CUBE/FÜHRUNGSKLOTZ

Poz.	Objednaci cislo	Ver.	Nazev polozky	Rozmer	Ks
1	30.1810-102	3	DRZAK / HOLDER / HALTER	TYC 28	1
2	30.C210-403	1	DISTANC / DISTANCE / DISTANZ	TR 16x3	2
3	30.Y310-212	2	EXCENTR / CAM / EXZENTER	d 15	2
4	30.Y310-306 (3)	0	SROUB IMBUS / ALLEN HEAD BOLT / IMBUSSCHRAUBE	M10x25	1
5	30.Y310-310	0	DRZAK TVRDOKOVU / POA HOLDER / HM-HALTER		1
6	30.Y310-320	0	DRZAK TVRDOKOVU / POA HOLDER / HM-HALTER		1
7	30.Y310-401 (1)	3	KOSTKA VODICI / LEAD CUBE / FÜHRUNGSKLOTZ	HR 80x50	1
8	90.001.25.010	0	SROUB IMBUS / ALLEN HEAD BOLT / IMBUSSCHRAUBE	M5X20	3
9	90.004.20.002	0	SROUB STAVECI / ADJUSTMENT BOLT / STELLSCHRAUBE	SROUB M6X12	1
10	90.005.55.017	0	SROUB 6HRANNY / 6 SIDED BOLT / SECHSKANTSCHRAUBE	SROUB M8X30	1
11	90.011.27.017	0	ZAPUSTNY IMBUS / COUNTERSINK BOLT / SENKSCHRAUBE	SROUB M6X16	2
12	90.100.55.005	0	MATICE / NUT / MUTTER	MATICE _ M8	1
13	90.100.55.006	0	MATICE / NUT / MUTTER	MATICE _ M10	2
14	90.150.50.006	0	PODLOZKA / WASHER / UNTERLEGSCHEIBE	PODLOZKA 10,5	2
15	90.154.50.001 (2)	0	PODLOZKA / WASHER / UNTERLEGSCHEIBE	10x16x0.1	2
16	90.301.02.009	0	KOLIK VALCOVY / CYLINDRICAL PIN SOFT / ZYLINDERSTIFT WEICH	KOLIK 10X26	1
17	90.350.02.005	0	PRUZINA TALIROVA / DISC SPRING / TELLERFEDER	20X10.2X1	6
18	95.001.004	0	LOZISKO / BEARING / LAGER	6000 2RS	1
19	95.001.014	0	LOZISKO / BEARING / LAGER	6200 2RS	4
20	95.800.002	0	SEGR HRIDEL. / OUTSIDE SAFETY RING / SICHERUNGSRING AUSSEN	POJISTNY KROUZEK 8	1

1.ZRUS.KOSTKA 30.1810-121 A NAHR.KOSTKOU 30.Y310-401. 142/ZM172 11.11.2009 SLEZACKOVA
2.PRIDANA PODLOZKA 90.154.50.001 . 277/ZM294 2.11.2010 SLEZACKOVA
3.ZRUSEN SROUB 30.6910-412 A NAHR.30.Y310-306. ZM150 8.8.2014 SLEZACKOVA

Cislo Sestavy/Number of assembly/Nummer der Baugruppe; Verze (Ver.)/Version/Version; Nazev sestavy/Assembly title/Name der Baugruppe; Pozice (Poz.)/Position/Position;
Objednaci cislo/Purchase order number/Bestellnummer; Nazev polozky/Volume title/Name der Position; Rozmer/Stock size/Abmessung

7.41. Kartáč / Brush / Bürste

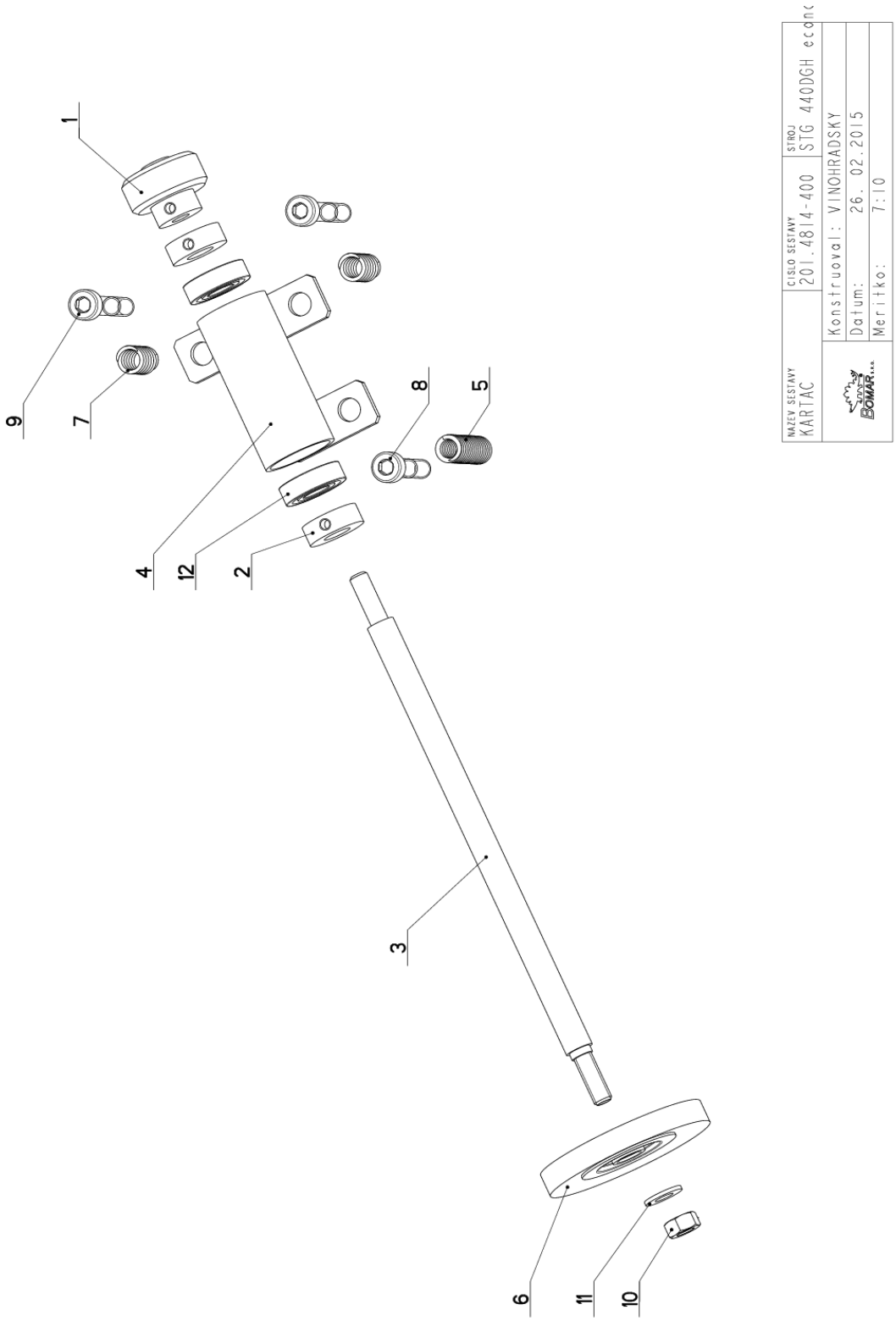

7.42. Kusovník / Piece list / Stückliste - Kartáč / Brush / Bürste

Cislo Sestavy	Ver.	Nazev sestavy
201.4814-400	0	KARTAC/BRUSH/BÜRSTE

Poz.	Objednaci cislo	Ver.	Nazev polozky	Rozmer	Ks
1	201.0814-204	0	KOLECKO / WHEEL / ROLLE	SESTAVA	1
2	30.0814-207	0	KROUZEK / RING / RING	d 25	2
3	30.4814-402	1	HRIDEL / SHAFT / WELLE	D 12	1
4	30.9214-301	2	DRZAK / HOLDER / HALTER		1
5	31.0305-211	0	PRUZINA / SPRING / FEDER	2x12x50x15,5	1
6	31.0814-208	0	KARTAC / BRUSH / BÜRSTE		1
7	31.1506-115	0	PRUZINA / SPRING / FEDER	1.6x12x25x7.5	2
8	90.001.25.038	0	SROUB IMBUS / ALLEN HEAD BOLT / IMBUSSCHRAUBE	M8X50	1
9	90.001.25.040	0	SROUB IMBUS / ALLEN HEAD BOLT / IMBUSSCHRAUBE	M8X60	2
10	90.100.55.005	0	MATICE / NUT / MUTTER	MATICE _ M8	1
11	90.150.50.005	0	PODLOZKA / WASHER / UNTERLEGSCHEIBE	PODLOZKA 8,4	1
12	95.001.005	0	LOZISKO / BEARING / LAGER	6001 2RS	2

Cislo Sestavy/Number of assembly/Nummer der Baugruppe; Verze (Ver.)/Version/Version; Nazev sestavy/Assembly title/Name der Baugruppe; Pozice (Poz.)/Position/Position;
Objednaci cislo/Purchase order number/Bestellnummer; Nazev polozky/Volume title/Name der Position; Rozmer/Stock size/Abmessung

7.43. Kolečko / Wheel / Rolle

Cislo Sestavy
201.0814-204

Ver.
0

Nazev sestavy
KOLECKO/WHEEL/ROLLE

Poz.	Objednaci cislo	Ver.	Nazev polozky	Rozmer	Ks
1	30.0814-204.1	0	KOLECKO / /	d 35	1
2	30.0814-204.2	0	NABOJ / /	d 20	1

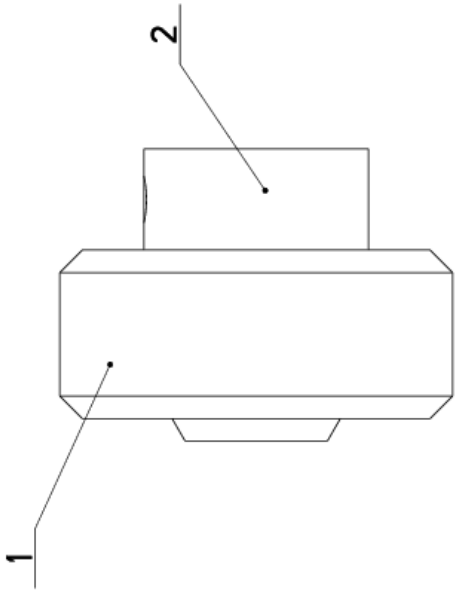

Cislo Sestavy/Number of assembly/Nummer der Baugruppe; Verze (Ver.)/Version/Version; Nazev sestavy/Assembly title/Name der Baugruppe; Pozice (Poz.)/Position/Position;
Objednaci cislo/Purchase order number/Bestellnummer; Nazev polozky/Volume title/Name der Position; Rozmer/Stock size/Abmessung

7.44. Válec zvedací / Lifting cylinder / Hebezylinder

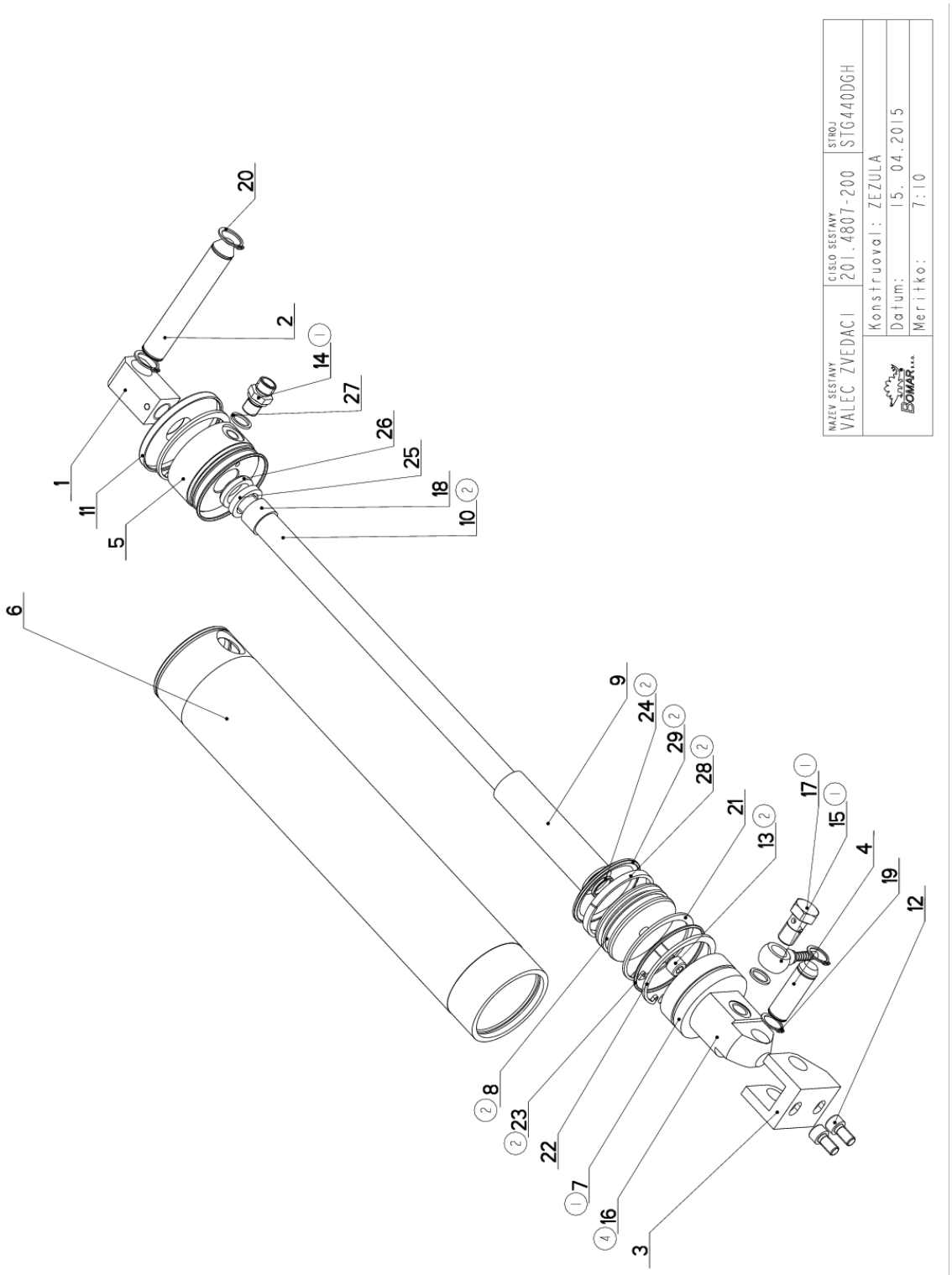

7.45. Kusovník / Piece list / Stückliste - Válec zvedací / Lifting cylinder / Hebezylinder

Cislo Sestavy	Ver.	Nazev sestavy
201.4807-200	4	VALEC ZVEDACI/LIFTING CYLINDER/HEBEZYLINDER

Poz.	Objednaci cislo	Ver.	Nazev polozky	Rozmer	Ks
1	30.0807-006	2	DRZAK / HOLDER / HALTER	TYC 25x25	1
2	30.0807-007	1	CEP / LUG / BOLZEN	d 18h9	1
3	30.0807-008	3	DRZAK / HOLDER / HALTER	HR 40x40	1
4	30.0807-009	2	CEP / LUG / BOLZEN	d 16h9	1
5	30.1807-001	1	VIKO / COVER / DECKEL	TYC 70	1
6	30.1807-002	6	VALEC / ROLLER / ZYLINDER	TRUBKA 73/63	1
7	30.1807-008 (1)	1	VIKO / COVER / DECKEL	d 65	1
8	30.2907-003 (2)	1	PIST / PISTON / KOLBEN	D65	1
9	30.4807-010	1	TRUBKA / TUBE / ROHR	TR28x4	1
10	30.8307-203 (2)	2	PISTNICE / PISTON ROD / KOLBENSTANGE	d20	1
11	31.1807-006	0	VIKO / COVER / DECKEL		1
12	90.001.25.031	0	SROUB IMBUS / ALLEN HEAD BOLT / IMBUSSCHRAUBE	8x16	2
13	90.001.25.032 (2)	0	SROUB IMBUS / ALLEN HEAD BOLT / IMBUSSCHRAUBE	8x20	1
14	92.002.001 (1)	0	SROUBENI PRIME / DIRECT BOLTING / GERADE VERSCHRAUBUNG	G 1/4"	1
15	92.054.001 (1)	0	KONCOVKA / END / ENDSTÜCK	KONCOVKA OKO	1
16	92.151.008 (4)	0	VENTIL POJISTNY / SAFETY VALVE / SICHERUNGSVENTIL	VPN-H 1/4"	1
17	93.010.002 (1)	0	SROUB / BOLT / SCHRAUBE	G1/4"	1
18	95.700.003	0	POUZDRO / SLEEVE / BÜCHSE	20X15	1
19	95.800.007	0	SEGR HRIDEL. / OUTSIDE SAFETY RING / SICHERUNGSRING AUSSEN	POJISTNY KROUZEK 16	2
20	95.800.008	0	SEGR HRIDEL. / OUTSIDE SAFETY RING / SICHERUNGSRING AUSSEN	POJISTNY KROUZEK 18	2
21	95.801.011	0	SEGR DIRA / INSIDE SAFETY RING / SICHERUNGSRING INNEN	POJISTNY KROUZEK 63	1
22	95.801.012	0	SEGR DIRA / INSIDE SAFETY RING / SICHERUNGSRING INNEN	POJISTNY KROUZEK 65	2
23	96.001.016 (2)	0	O-KROUZEK STATIC / STATIC O RING / O-RING STATISCH	60X2	2
24	96.002.007 (2)	0	KROUZEK O DYNAMICKY / DYNAMIC O RING / O-RING DYNAMISCH	16x2 NBR 70SH	1
25	96.041.002	0	TESNENI / SEALING / DICHTUNG	601-20x28x5	1
26	96.060.002	0	KROUZEK STIRACI / SCRAPER RING / ABSTREIFRING	KROUZEK STIRACI 20	1
27	96.082.002	0	TESNENI / SEAL RING / DICHTUNGSRING	13/17x1.5 CU	2
28	96.084.002 (2)	0	KROUZEK VODICI / LEAD RING / FÜHRUNGSRING	GP6500630-T47	1
29	96.900.016 (2)	0	TESNENI KOMBINOVANE / COMBINATION SEALING / KOMBIDICHTUNG	PT0200630	1

1.ZRUS.VIKO 30.1807-007 A NAHR.30.1807-008,ZRUS.SOUCASTI REDUKCE 9107-509,SROUBENI 92.003.001,30.1807-005, PRIDANY SOUCASTI KONCOVKA 92.054.001,SROUB 93.010.002,SROUBENI 92.002.001. 026/ZM020 9.2.2011 SLEZACKOVA
2.ZRUS.PIST30.0807-004 A NAHR.30.2907-003,ZRUS.PISTNICE 30.1807-003 A NAHR.30.8307-203,ZRUS.SOUCASTI 90.100.55.006,90.101.55.003,96.002.020,96.001.004,PRID.SROUB M8x20 90.001.25.032,TESNENI 96.900.016,KROUZEK 96.084.002, ZRUS.KROUZEK 96.001.015 A NAHR.KROUZKEM 60x2 96.001.016. 026/ZM034 31.3.2011 SLEZACKOVA
3.ZMENA KOTY 182 NA 174. 204/ZM244 8.9.2011 SLEZACKOVA
4.VENTIL 92.151.008 NAHR.SROUB M8 92.151.008 026/ZM221 13.2.2012 SLEZACKOVA

Cislo Sestavy/Number of assembly/Nummer der Baugruppe; Varze (Ver.)/Version/Version; Nazev sestavy/Assembly title/Name der Baugruppe; Pozice (Poz.)/Position/Position; Objednaci cislo/Purchase order number/Bestellnummer; Nazev polozky/Volume title/Name der Position; Rozmer/Stock size/Abmessung